TEAC®

SERVICE MANUAL

V-900X/V-800X/V-700

Stereo Cassette Deck

Effective: April, 1984

5704020500

1 SPECIFICATIONS AND SERVICE DATA

仕様及びサービス・データ

Notes:

1. Improvements may result in changes in specifications and service data.
2. 0 dB is referenced to 0.775 V in this manual.

注

1. 仕様およびサービス・データは改善のため，予告なく変更することがあります．
2. 本マニュアルの0 dBは0.775Vを基準としています．

SPECIFICATIONS

Track system 4-track, 2-channel stereo
Heads 3: Erase, record and playback
Type of tape Standard compact cassette, C-60 and C-90
Tape speed 4.76 cm/s (1-7/8 ips)
Input (level and impedance)
MIC: Specified input level: −57 dB (1.09 mV)/10 kohms
Minimum input level: −67 dB (346 μV)
LINE IN: Specified input level: −9 dB (275 mV)/50 kohms
Minimum input level: −19 dB (86.9 mV)
Output (level and impedance)
OUTPUT: Specified output level: −4 dB (490 mV)
50 kohms or more
PHONES: Specified output level: −9.8 dB (250 mV)/8 ohms
Equalization
METAL: 3180 μs + 70 μs
CrO_2: 3180 μs + 70 μs
NORMAL: 3180 μs + 120 μs
Head configuration
1/2-track, 1-channel erase head
1/4-track, 2-channel record and playback head
Motors 1 DC FG servo DD capstan motor (V-900X)
1 DC servo capstan motor (V-800X/V-700)
1 DC reel motor
1 mechanism control motor
Bias frequency 100 kHz
Operation position Horizontal
Power requirements
100/120/220/240 V AC, 50/60 Hz (General Export Models)
120 V AC, 60 Hz (U.S.A./Canada)
220 V AC, 50 Hz (Europe)
240 V AC, 50 Hz (U.K./Australia)
Power consumption
38 W (V-900X)
36 W (V-800X)
34W (V-700)
Dimensions See Fig. 1-1 on page 3.
Weight 7.5 kg (16.5 lbs) net

CAUTION

⚠Parts marked with this sign are safety critical components. They must always be replaced with identical components – refer to the appropriate parts list and ensure exact replacement.

注　意

⚠印は安全重要部品です．交換する時は必ずティアック指定の部品を使用してください．

SERVICE DATA

MECHANICAL

Tape speed deviation 3000 Hz ± 45 Hz (V-900X)
3000 Hz ± 60 Hz (V-800X/V-700)
Tape speed drift 45 Hz (V-900X), 60 Hz (V-800X/V-700)
Wow and flutter
Playback: 0.06% (WRMS)
Record/playback: 0.20% (RMS) (V-900X),
0.25% (RMS) (V-800X/V-700)
Pinch roller pressure
330 to 470 g (11.6 to 16.6 oz) (V-900X)
380 to 520 g (13.4 to 18.3 oz) (V-800X/V-700)
Reel Torque
Take-up: 30 to 60 g-cm (0.42 to 0.83 oz-inch)
Supply: 2 to 6 g-cm (0.028 to 0.083 oz-inch)
F.F./REW: 110 to 170 g-cm (1.5 to 2.4 oz-inch)
Fast winding time 100 seconds for MTT-551 (C-60)

ELECTRICAL

Frequency response See Figs. 5-9 to 5-12
Signal-to-noise ratio
Playback: NORMAL: 47 dB min.
Overall: METAL, CrO_2: 46 dB min.
NORMAL: 45 dB min.
dbx IN, for all tape positions: 65 dB min.
Erase efficiency 65 dB min. at 1 kHz (measured with input 10 dB higher than the specified input level)
Channel separation 30 dB min. at 1 kHz
Adjacent track crosstalk 40 dB min. at 125 Hz
Total harmonic distortion
2.5% or less with METAL, CrO_2 and NORMAL tapes

- Dolby Noise Reduction System manufactured under license from Dolby Laboratories Licensing Corporation. "Dolby" and the double-D symbol are trademarks of Dolby Laboratories Licensing Corporation.
- dbx Noise Reduction system made under license from dbx, Incorporated. The name "dbx" and the dbx symbol are trademarks of dbx, Incorporated.

- ドルビーノイズリダクションシステムは，ドルビー研究所からの実施権に基づき製造されています．
- ドルビー及び DDは，ドルビー研究所の登録商標です．
- dbxおよびdbxマークはdbxインコーポレーテッドの登録商標です．
- dbxシステムはdbxインコーポレーテッドの実施権に基づいて製造されています．

108

EXPLODED VIEWS
PARTS LIST
SCHEMATIC DIAGRAMS

V-900X/V-800X/V-700

PRELIMINARY

暫定版

This parts list is for temporary use only. Discard when the service manual which includes the final parts list is delivered.

この部品表は暫定版です。サービスマニュアルが届きましたら

廃棄して下さい。

NOTES

1. All resistors are rated ±5 % tolerance, 1/4 watt and of carbn type, unless otherwise noted.
   Resistor valued are in ohms (k=kilo-ohms M=megohms).
2. All capacitor values are in microfarads (p=picofarads).
3. ⚠ Parts marked with this sign are safety critical components. They must always be replaced with identical components.
   Refer to the appropriate parts list to ensure exact replacements.

INSTRUCTIONS FOR SERVICE PERSONNEL

BEFORE RETURNING APPLIANCE TO THE CUSTOMER, MAKE LEAKAGE-CURRENT OR RESISTANCE MEASUREMENTS TO DETERMINE THAT EXPOSED PARTS ARE ACCEPTABLY INSULATED FROM THE SUPPLY CIRCUIT.

TEAC®

February, 1984

5704020400

108

EXPLODED VIEW-1

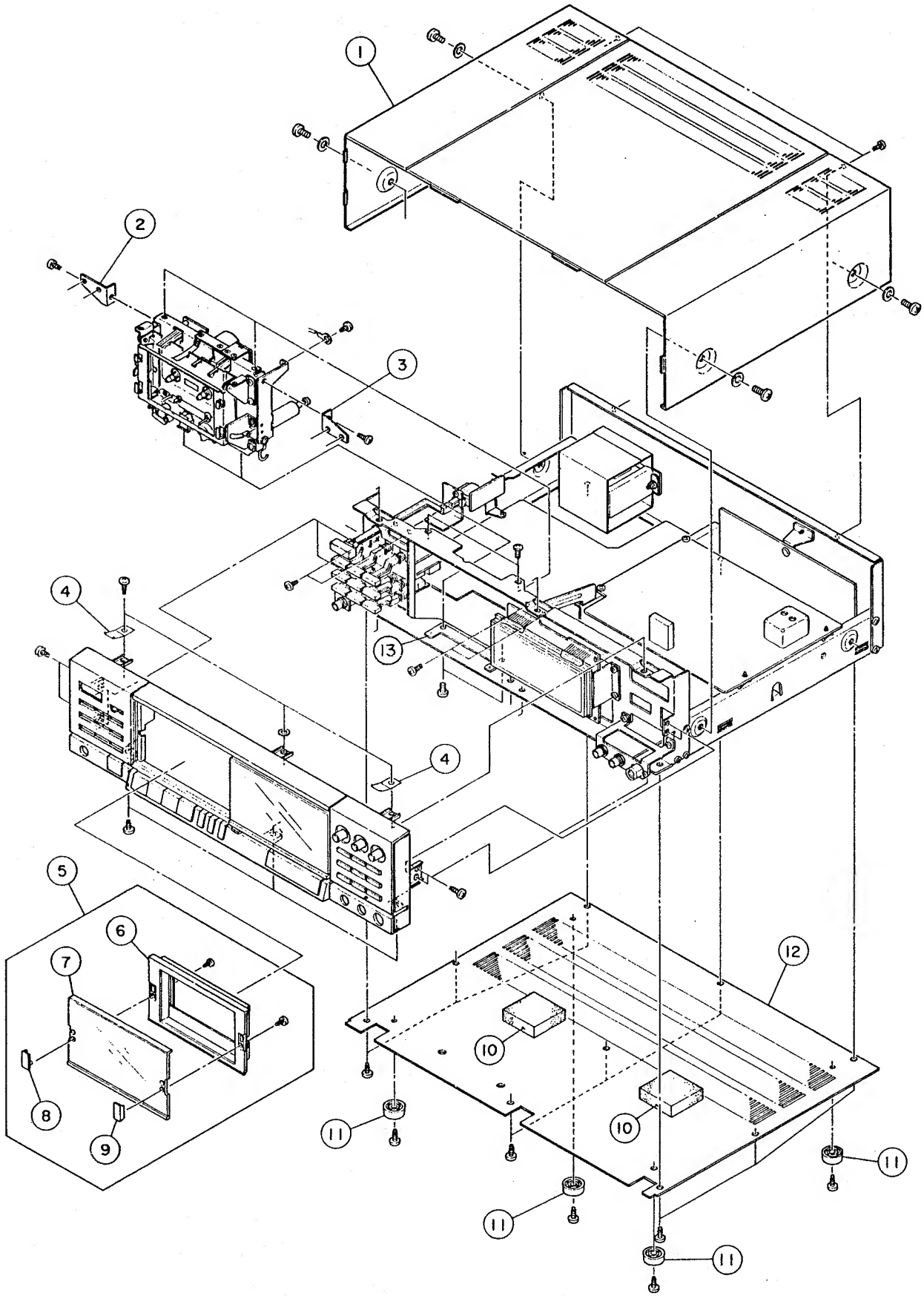

2 REMOVAL OF EXTERNAL COMPONENTS

外装部品の外し方

Disassemble in number-order
番号順に外して下さい

Fig. 2-1

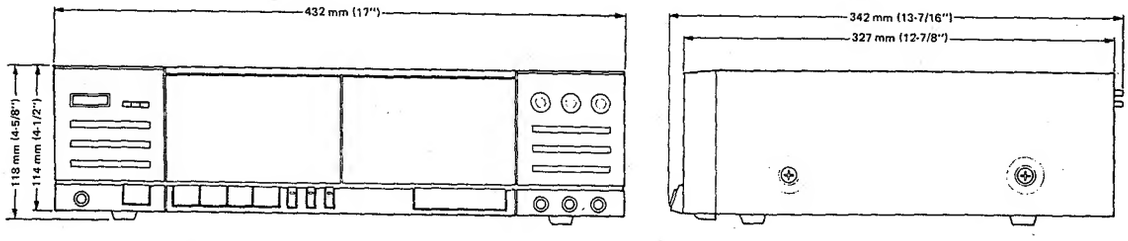

Fig. 1-1

3 PARTS LOCATION

部品配置図

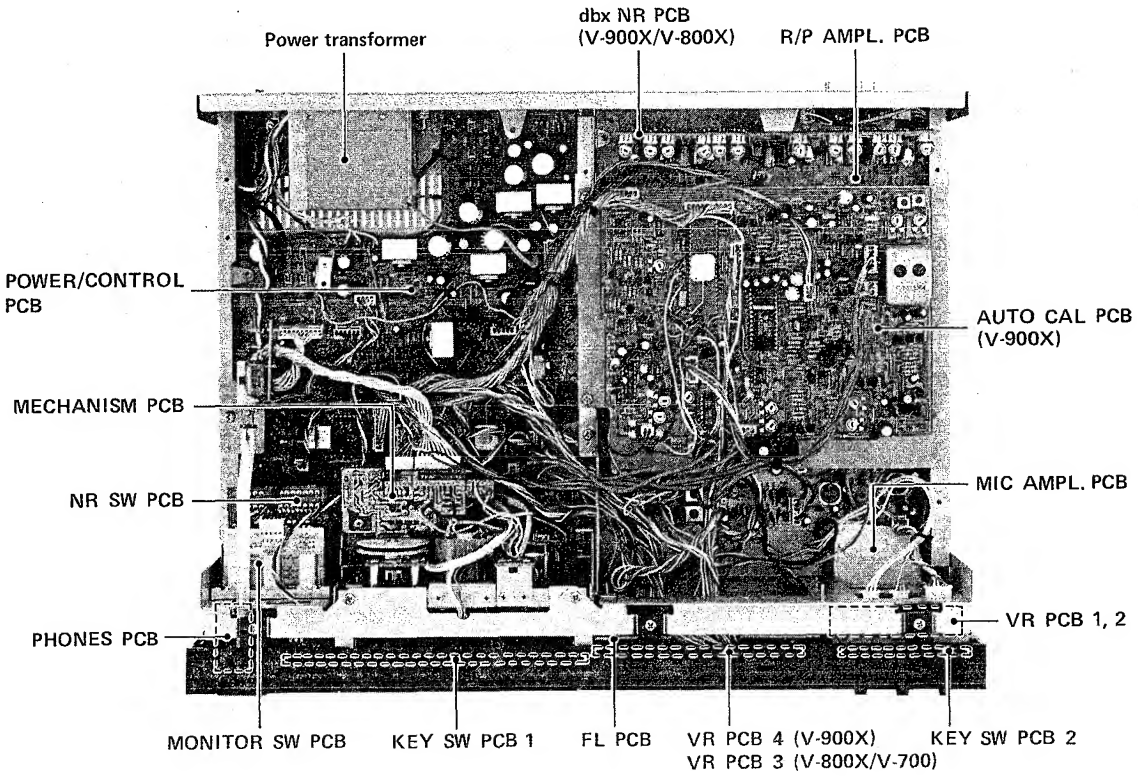

Fig. 3-1 Top view 上面図

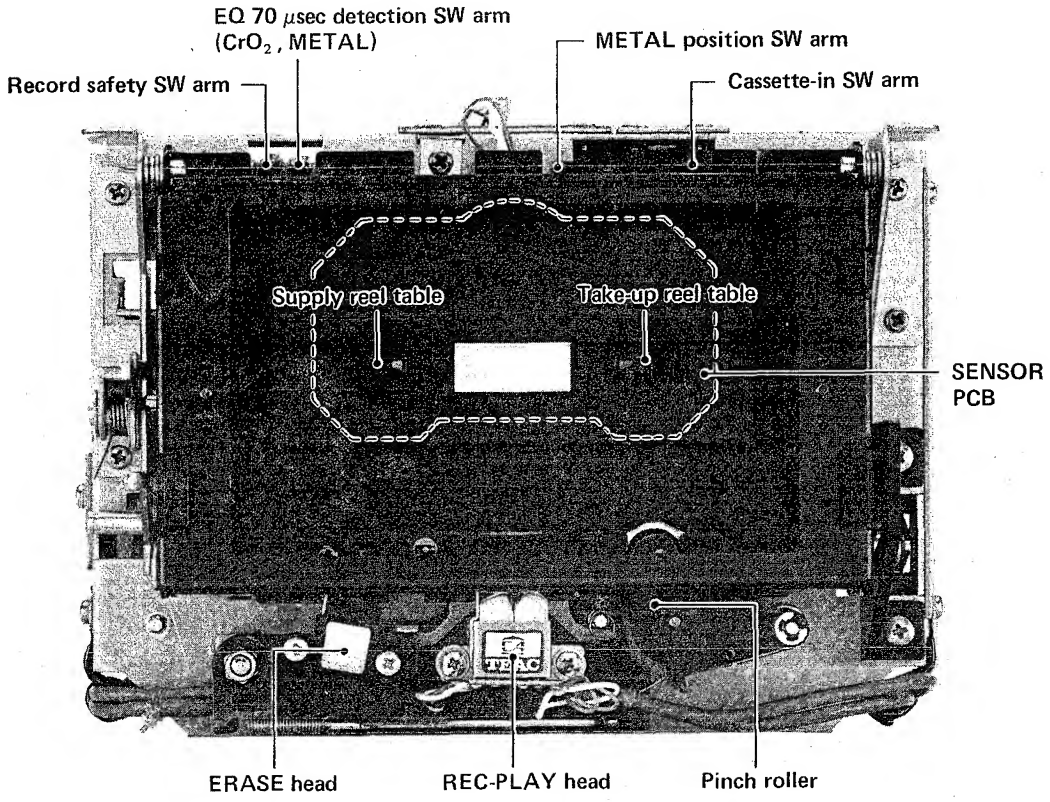

Fig. 3-2 Transport front view トランスポート前面図

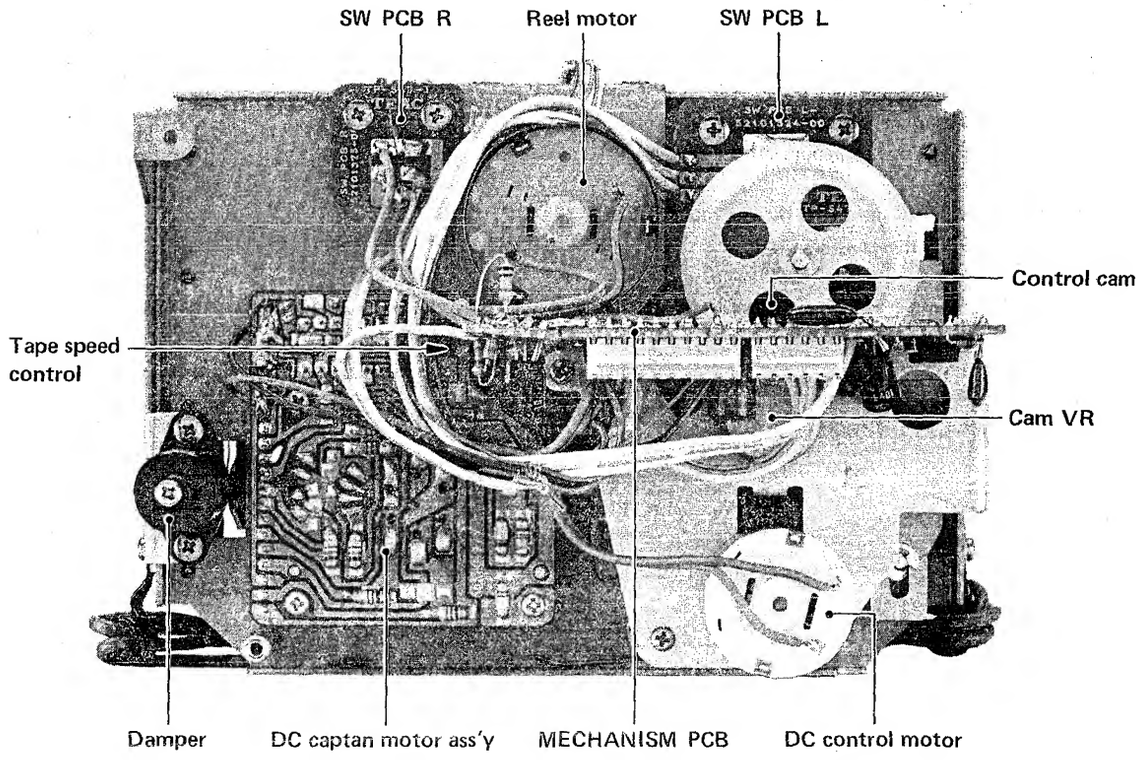

Fig. 3-3 Transport rear view トランスポート後面図 (V-900X)

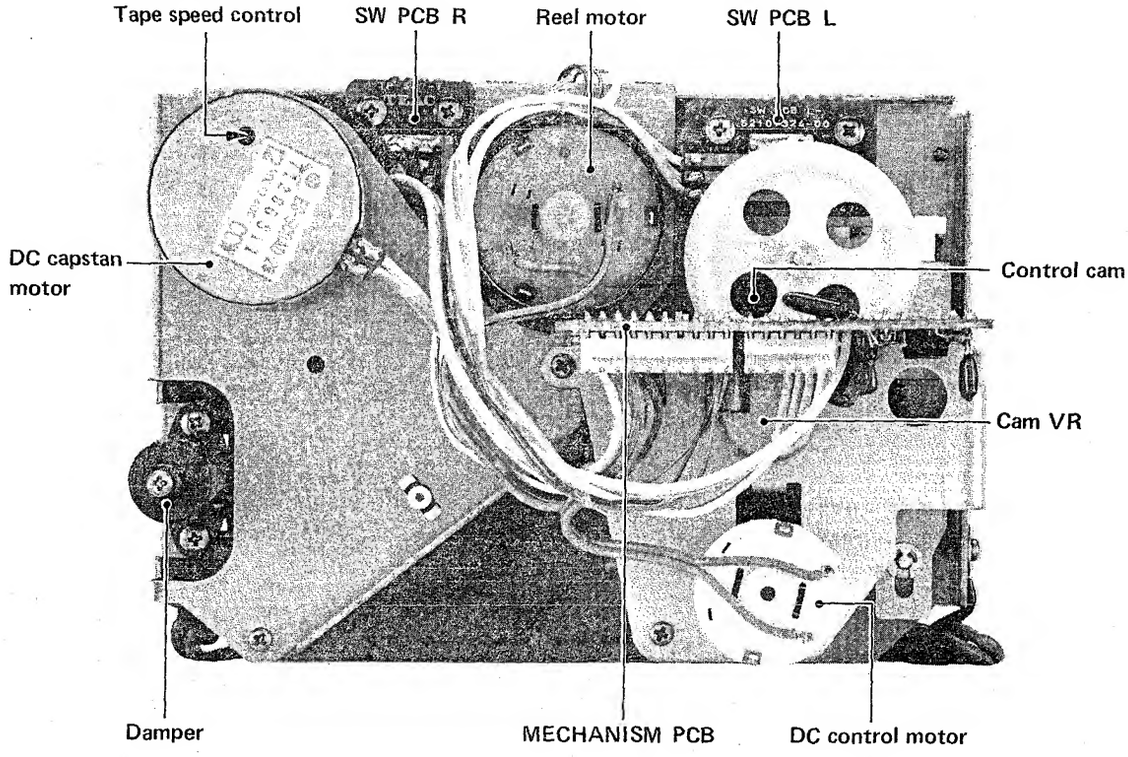

Fig. 3-4 Transport rear view トランスポート後面図 (V-800X/V-700)

4 MECHANICAL ADJUSTMENTS AND CHECKS

機構部の調整と確認

4-1 PINCH ROLLER PRESSURE

1. While pushing up the cassette-in sensor arm with the cassette holder shut (Fig. 3-2), activate the play mode. Keep the sensor arm pushed up during measurement.
2. Hook a spring scale to the small opening on the pinch roller arm.
3. Pull the scale downwards until there is sufficient force to separate the pinch roller from the capstan shaft, and then allow the pinch roller to just touch the capstan shaft again.
4. Read the scale when the pinch roller just starts to rotate. The readings should be as specified below.
   Specifications:
   V-900X: 330 g ~ 470 g (11.6 oz ~ 16.6 oz)
   V-800X/V-700: 380 g ~ 520 g (13.4 oz ~ 18.3 oz)

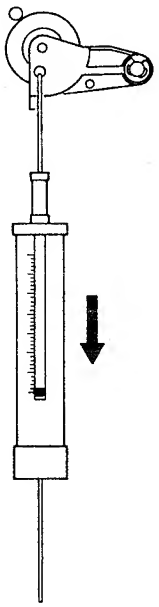

Fig. 4-1

4-2 REEL TORQUE

1. Load the cassette torque meter on the deck and read the pointer indication on the dial scale for each tape transport operation. The measured torque should be within the following specified values:
   Specifications:
   Take-up: 30 ~ 60 g·cm (0.42 ~ 0.83 oz·inch)
   Supply: 2 ~ 6 g·cm (0.028 ~ 0.083 oz·inch)
   F.F./REW: 110 ~ 170 g·cm (1.5 ~ 2.4 oz·inch)

4-3 CASSETTE HOLDER

1. Adjust the position of holder guide plate so that it is parallel with the cassette holder as shown in Fig. 4-2 when a cassette tape (MTT-551, etc.) is loaded.

4-1 ピンチ・ローラ圧着力

1. カセット・ホルダを閉じた状態で，カセットイン・センサ・アーム（図3-2）を上方に押して，プレイ・モードにする．測定中，センサ・アームは上方に押し続けること．
2. ピンチ・ローラ・アームの小さい穴にバネ秤を掛ける．
3. ピンチ・ローラを回転が止まるまで秤を真下に引張った後，ピンチ・ローラが再びキャプスタン・シャフトに接触するように徐々に戻す．
4. ピンチ・ローラが回りはじめる時の値を読む．
   規格値：330 g ～470 g （V-900X）
   380 g ～520 g （V-800X/V-700）

4-2 リール・トルク

1. カセット型トルク・メータによる測定値が下表の範囲内であることを確認する．
   テイクアップ・トルク： 30～60 g・cm
   バックテンション・トルク：2～6 g・cm
   早送りトルク： 110～170 g・cm

4-3 カセット・ホルダ位置

1. テープ(MTT-551等)がセットされた状態で，カセット・ホルダとホルダ・ガイド板とが平行になるように，ホルダ・ガイド板取付位置を調整する．

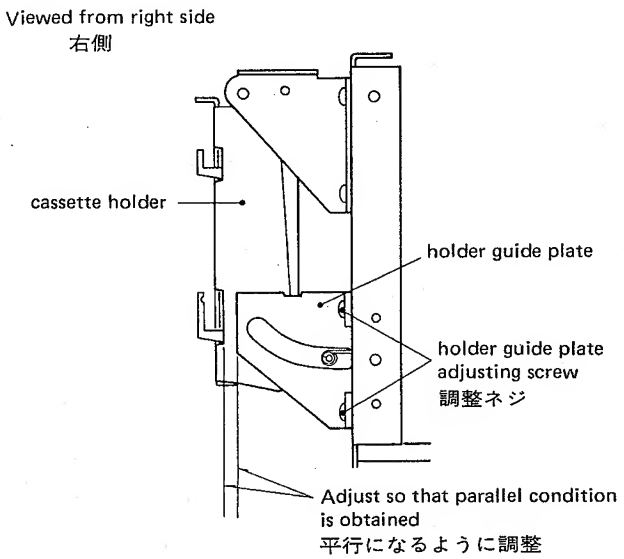

Fig. 4-2

4-4 DAMPER ADJUSTMENT

1. Load a C-60 tape (MTT-5061, etc.) and close the cassette holder.
2. Turn the air adj. screw so that after pushing the EJECT button, the cassette holder opens smoothly and completely.

Note: Be careful not to turn the screw beyond the permissible adjustment limit.

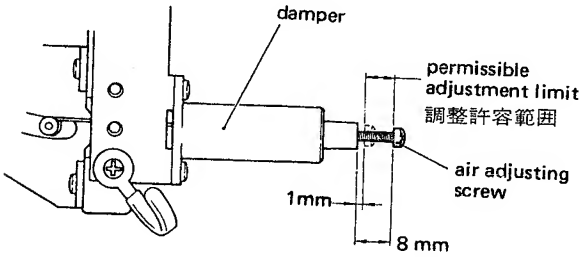

Fig. 4-3

4-4 ダンパ調整

1. C-60テープ(MTT-5061等)を装てん後，カセット・ホルダを閉じる.
2. EJECTボタンを押してカセット・ホルダがスムーズに又充分に開くように図示のネジを調整する.
   注意：図に示す許容調整範囲を越えてネジを回さないこと.

4-5 LEAF SWITCH POSITION

1. When remounting SW PCB L ass'y* or SW PCB R ass'y* is required, push it (them) as far upward (as shown by the arrows) as possible. Afterwards, check that each of PCB-mounted leaf switch shape is normal (Fig. 4-4's A), then proceed to the next steps.
   * SW PCB L ass'y: Record safety switch, EQ 70 μsec detection switch (CrO_2, METAL) mounted
     SW PCB R ass'y: METAL position switch, cassette-in switch mounted
2. Load a NORMAL tape, then a METAL tape, with their record protection tabs in place, and check that the NORMAL indicator and then the METAL indicators on the front panel light respectively.
3. Load a METAL tape without its record protection tab, then check that when the EJECT button is depressed, the cassette holder properly opens.
4. Load a CrO_2 tape with its record protection tab in place, and check that the CrO_2 indicator lights.

4-5 リーフ・スイッチ位置

1. SW PCB L ass'y* 又はSW PCB R ass'y* を再取付の場合は，できるだけ上方(図の矢印方向)に取付ける．取付後，リーフ・スイッチに変形がないこと（図4-4のA)を確認してから次項以降のチェックをする.
   * SW PCB L ass'y: 録音防止スイッチ，EQ70 μsec検出スイッチ(CrO_2，METAL)付
     SW PCB R ass'y: METALポジション・スイッチ，カセット・イン・スイッチ付
2. 誤消去防止用つめ付のNORMALテープ及びMETALテープを装てんして，テープ・タイプ・ディスプレイの NORMAL ，METAL が各々表示されるか確認する.
3. 誤消去防止用つめ無しのMETALテープを装てんして，EJECTボタンを押した時，カセット・ホルダが確実に開くか確認する.
4. 誤消去防止用つめ付のCrO_2テープを装てんして CrO_2 が表示されるか確認する.

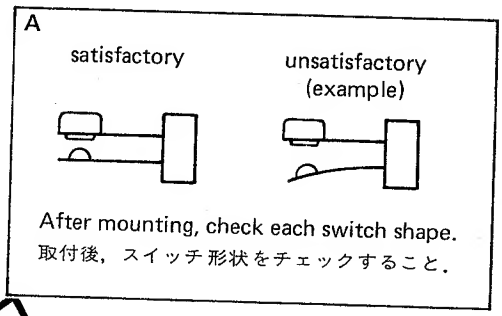

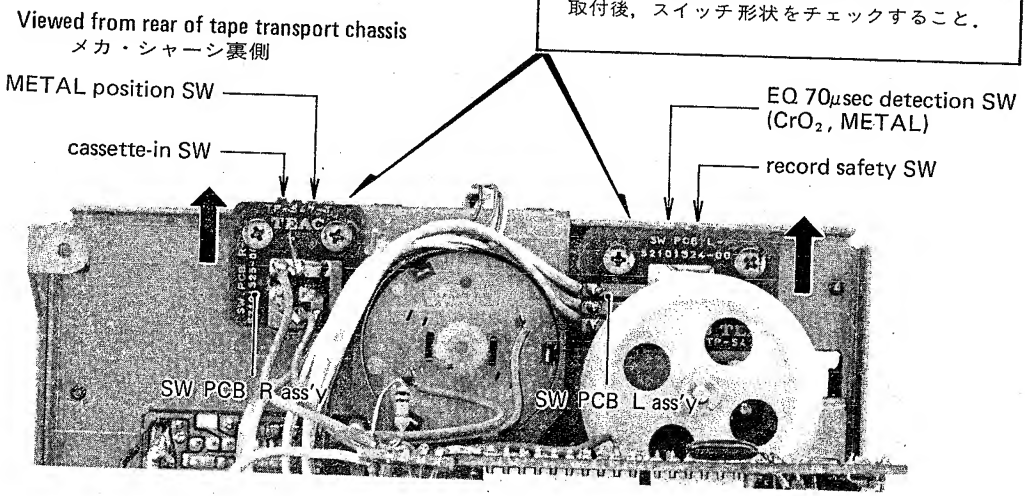

Fig. 4-4

4-6 CONTROL CAM POSITIONING

1. Temporarily set resistance values of R10 and R11 on MECHA PCB at approx. the mid point of their respective variable ranges.
2. Load an empty cassette (without tape) or activate the cassette-in switch to the on position with your finger.
3. Push the PAUSE button, the adjust R11 so that the hole of marker PA coincides with the reference line of the reel motor mounting plate (See Fig. 4-6).
4. Rotate in both directions the control cam by hand several times to check the points where the reel motor starts to vibrate. If necessary, readjust R11 so that the distances from CW to the hole and CCW to the hole on the PA marker are nearly equal when the reel motor starts to vibrate.
5. Place the deck in STOP mode and adjust R10 as explained above for R11, this time referring to the center ST hole.
6. Repeat steps 3 – 5 until PA and ST position adjustments are satisfied.

4-6 コントロール・カムの位置調整

1. MECHA PCB上のR10,R11の抵抗値を各々，可変範囲のほぼ中間に仮設定する.
2. テープのない空カセットを装てん（カセット・イン・スイッチを手でオンしても可）する.
3. PAUSE状態でコントロール・カム(図4-6)のPA範囲の中心穴が，リール・モータ取付板の基準線に一致するようR11を調整する.
4. 次に手でカムを正転・逆転させ，カム・モータの振動が始まる点がいずれもカムのPA範囲の中心穴から等間隔になるようR11を微調整する.
5. 同様にSTOP状態にし，カムのST範囲の中心穴から等間隔になるようR10を調整する.
6. PA位置及びSA位置の調整が満足されるまで3項～5項を繰り返す.

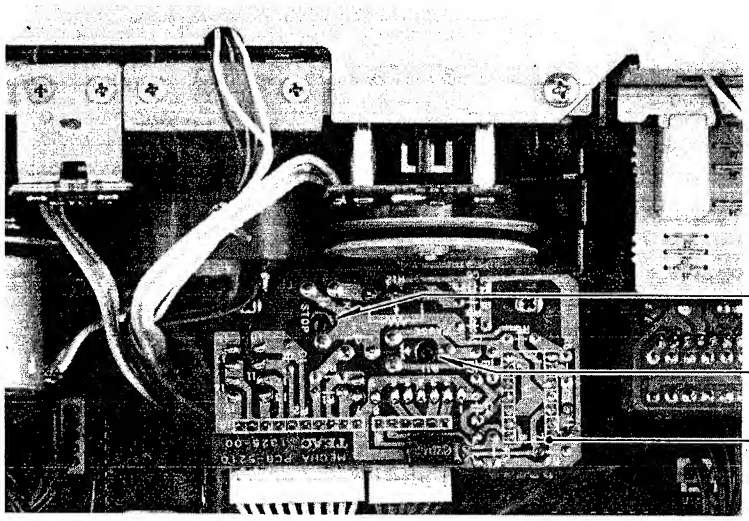

Fig. 4-5

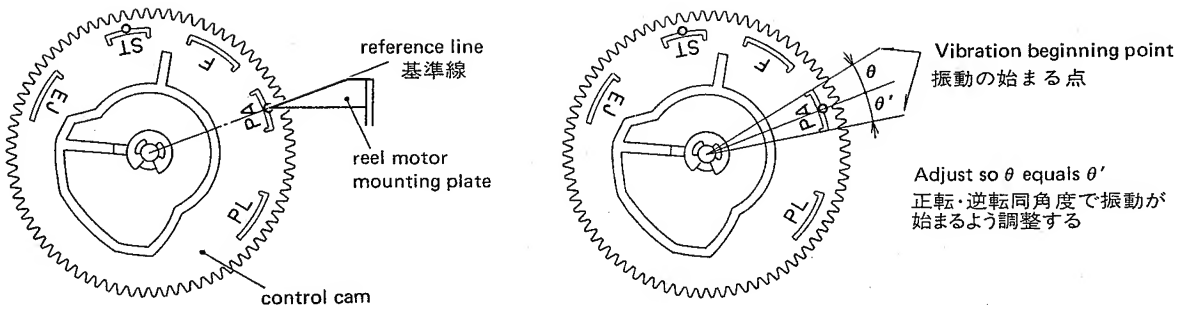

Refer to Fig. 3-3, Fig. 3-4 for control cam location
コントロール・カムの取付個所は図3-3，図3-4参照

Fig. 4-6 Control cam adj. コントロール・カム調整

4-7 TAPE SPEED

1. Connect a frequency counter to the deck as shown in Fig. 4-7.
2. On the V-800X/V-700, depress POWER switch to "on" in order to warm up the capstan motor for at least one minute.
3. Playing the mid portion of an MTT-111 test tape, adjust the trimmers below so that tape speed becomes 3,000 Hz ±5 Hz (on V-800X/V-700: 3015 ~ 3025 Hz if more than 5 minutes after its motor rotation starts). An insulated and non-metallic flat-head screwdriver should be used for this adjustment.
   Adjustor: V-900X: Semi-fixed resistor on DC capstan motor assembly's PCB (Fig. 3-3)
   V-800X/V-700: Semi-fixed resistor on the capstan motor (Fig. 3-4)
4. Make sure the following values are obtained at the beginning and at the end of the tape.
   Deviation: 3,000 Hz ±45 Hz (V-900X)
   3,000 Hz ±60 Hz (V-800X/V-700)
   Width of deviation: Within 45 Hz (V-900X)
   Within 60 Hz (V-800X/V-700)

4-7 テープ速度

1. 図4-7のように周波数カウンタをデッキに接続する.
2. V-800X/V-700の場合, 電源スイッチをオンしてキャプスタン・モータを約1分間ウォーミング・アップさせる.
3. MTT-111テスト・テープの中間部を再生して, テープ速度が3,000Hz±5Hz(V-800X/V-700の場合, キャプスタン・モータの回転が5分以上経過した時, 3,015~3,025Hz) になるように調整する. 調整には充分絶縁された非金属製マイナス・ドライバを使用すること.
   調整個所：V-900X: DCキャプスタン・モータass'yの基板内の半固定ボリウム (図3-3)
   V-800X/V-700: キャプスタン・モータ内の半固定ボリウム(図3-4)
4. テープの巻始めと巻終りにて下記の値が得られることを確認する.
   偏差： 3,000Hz±45Hz (V-900X)
   3,000Hz±60Hz (V-800X/V700)
   変動巾：45Hz以内 (V-900X)
   60Hz以内 (V-800X/V-700)

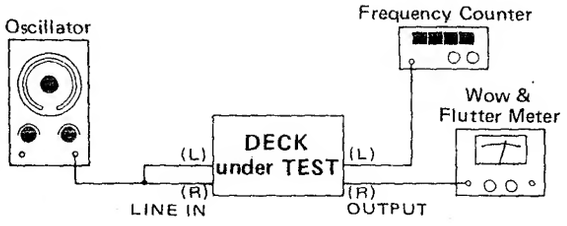

Fig. 4-7

4-8 WOW AND FLUTTER

Note: These measurements should be made at the beginning, middle and the end of the tape.

4-8-1 PLAYBACK METHOD

1. Connect a wow and flutter meter to the deck as shown in Fig. 4-7.
2. Load and play a TEAC MTT-111 test tape or equivalent.
3. Measure the wow and flutter value.
   Specification: 0.06% WRMS

4-8-2 RECORD/PLAYBACK METHOD

Note: When measuring with this method, the recorded section should be played back repeatedly to obtain an average value. Be careful not to read the meter for those parts of the tape in which wow and flutter components in recording and playback cancel each other.

4. Load a blank TEAC MTT-552 test tape or equivalent and record a 3,000 Hz signal.
5. Rewind the tape to the beginning of the recorded section, and play it.
6. The wow and flutter should not be more than specified.
   Specifications: 0.20% RMS (V-900X)
   0.25% RMS (V-800X/V-700)

4-8 ワウ・フラッタ

注意：テープの巻始め, 中間, 巻終りでそれぞれ測定する.

4-8-1 再生法

1. 図4-7のようにワウ・フラッタ・メータをデッキに接続する.
2. TEAC MTT-111テスト・テープ又は相当品を装てんして再生する.
3. ワウ・フラッタ値を測定する.
   規格： 0.06%WRMS(聴感補正)

4-8-2 録再法

注意： 本測定法の場合, 録音した部分を幾度かストップ, 再生を繰り返し, 大きく振れる平均的な値を読む. 録音した時と再生した時のワウ・フラッタの成分の位相がキャンセルしたところを読まないようにする.

4. ブランク・テスト・テープTEAC MTT-552又は相当品を装てんして, 3,000Hz信号を録音する.
5. テープの録音した部分を巻戻して再生する.
6. ワウ・フラッタ値は下記の規格から外れないこと.
   規格： 0.20%RMS (非聴感補正) (V-900X)
   0.25%RMS (非聴感補正) (V-800X/V-700)

4-9 TAPE PATH ADJUSTMENT

1. Turn the azimuth adj. screw so that observing by eye the REC. PLAY head becomes parallel with the mechanism chassis as far as possible.
2. Press the EJECT button to open the cassette holder. Insert the head check jig A into the cassette holder. Close the holder then push the jig in firmly.
   Notes: • Head check jig A should be inserted with its edge set on the stoppers at the bottom of the cassette holder (Fig. 4-9).
   • Be careful for the head check jig A not move off the stoppers of the cassette holder when closing the cassette holder.
3. Making sure that in play mode the head check jig B touches the surface of the REC.PLAY head, adjust head position so that the slanted edge of the head check jig B comes to rest approximately in the middle between the two line markers on the head check jig. A. For adjusting, loosen the head position adj. screw, then adjust head position, and complete by tightening the screw.
4. Set the head check jig B as shown in Fig. 4-11 so that the head check jig B can just pass through smoothly between the tape guides. If head height is too low, add the head spacer*. If it is too high, remove the head spacer. Height adjustment should be satisfied together with parallel adjustment mentioned in step 1.
   * Head spacer: TEAC P/N 5800468900, thickness 0.15 mm
5. In the same way as above, check the erase head height using the head check jig B. If needed, adjust it by turning the adj. nut.
6. Play a C-90 type mirror tape (MTT-902T, etc.) and check the following contents.
   • The head core (silver) of the REC.PLAY head should not be visible from the tape edge.
   • Any noticeable tape curling should not occur on the sides of the REC.PLAY head guide.
   • Moving tape should touch the erase head's upper guide.
7. In play mode, check the following contents.
   • The clearance between erase head plate/head stopper: more than 0.3 mm (Adjust by bending the stopper)
   • There should be a gap between head cover (B)/head stopper.

4-9 テープ走行調整

1．録・再ヘッドとメカ・シャーシーが目測にてできるだけ平行になるようにアジマス調整ネジを回す．

2．EJECTボタンを押してカセット・ホルダを開く．ヘッド治具Aを入れてカセット・ホルダを閉じる．閉じた後はヘッド治具Aを確実に内側へ押す．

注意：

●ヘッド治具Aはその底端部がカセット・ホルダのストッパにて支持されるように入れること（図4-9）

●カセット・ホルダを閉じる際，ヘッド治具Aがストッパから外れないこと．

3．プレイ状態にしてヘッド治具Bを録・再ヘッドの先端に当てた時，その治具Bがヘッド治具Aのマーカ基準範囲内のほゞ中央になるようヘッドの位置を調整する．調整はヘッドの位置調整ネジをゆるめて行ない，再締めして完了する．

4．ヘッド治具Bを図4-11のようにセットした時，録・再ヘッドのテープ・ガイドをスムーズに通り抜けることを確認する．若し，ヘッドの高さが低い時はヘッド・スペーサ* を追加し，低い場合はヘッド・スペーサを外す．高さ調整は1項の平行度も満足させて行なうこと．

*ヘッド・スペーサ：TEAC品番 5800468900，板厚 0.15mm

5．上記と同様の方法でヘッド治具Bを用いて消去ヘッドの高さをチェックする．調整は調整ナットによって行なう．

6．C-90型ミラー・テープ(MTT-902T)を走行させ，次のことを確認する．

●録・再ヘッドのコア(銀色)がテープよりはみだして見えないこと．

●録・再ヘッドのガイドでテープがカールしないこと．

●消去ヘッドの上側ガイドにテープが接すること．

7．プレイ状態にて次のことを確認する．

●消去ヘッド取付板とヘッド・ストッパとのスキ間：0.3mm以上(調整はヘッド・ストッパを曲げて行なう)

●ヘッド・カバーBにヘッド・ストッパが当らぬこと．

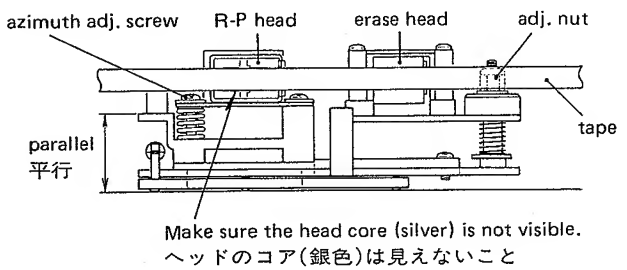

Fig. 4-8

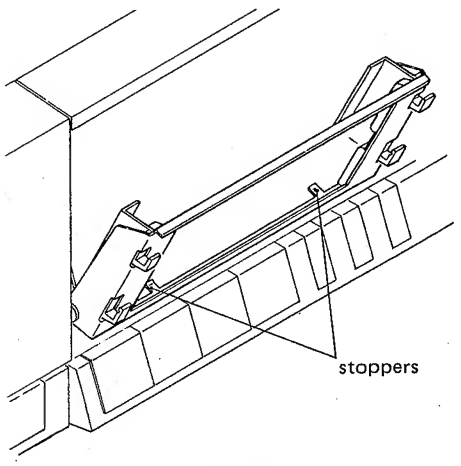

Fig. 4-9

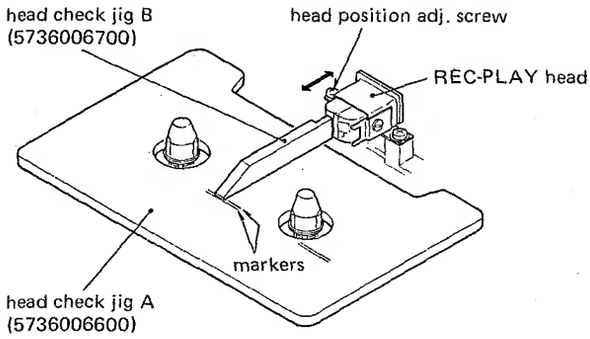

Fig. 4-10

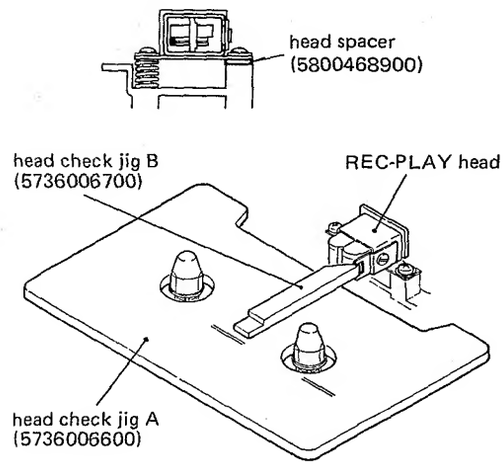

Fig. 4-11

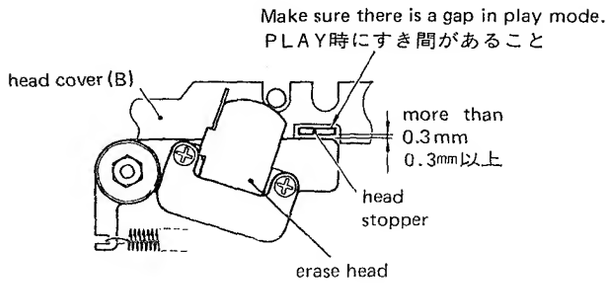

Fig. 4-12

4-10 LUBRICATION (V-800X/V-700)

Lubrication is only required when parts are replaced. For this purpose, use the oil and grease specified below.

Oil: TEAC TZ-255A motor oil (from TEAC TZ-255 oil kit), Mobil D.T.E. Oil Light, or equivalent

Grease: ORE-LUBE G1/3 or equivalent

1. Apply a drop of oil with an oil applicator to a point about 1/3 the way down the shaft (from the free end) of the flywheel, then insert the shaft into the capstan housing.
2. Apply a suitable amount of light grease to the well of the flywheel bearing.

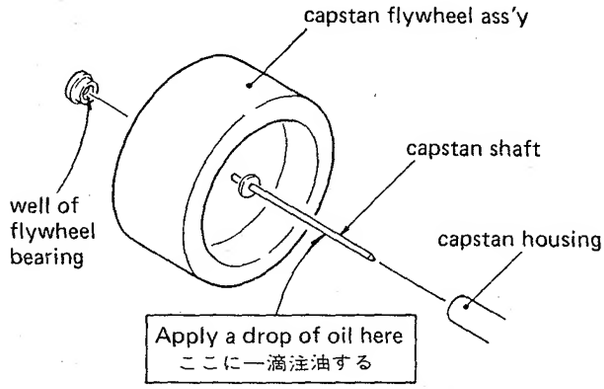

Fig. 4-13

4-10 注油(V-800X/V-700)

注油は部品が交換される時のみ必要です．注油には下記に明示するオイルとグリースを使用します．

オイル： TEAC TZ-255Aモータ・オイル(TEAC TZ-255オイル・キットから)
モービルD・T・Eオイル・ライト，または相当品

グリース：オア・ルーブG1/3，または相当品

1．フライホイル軸の先端から約1/3下った軸面へ，注油器にてオイル1滴を注油後，フライホイル軸をキャプスタン・ハウジングへそう入する．

2．適量のグリースをフライホイル・ベアリング受けへつける．

4-11 REMOTE CONTROL REFERENCE VOLTAGE (V-900X/V-800X)

If the RC-203 remote control unit (optional) is used to operate the deck, the following adjustment procedure is needed.

1. Connect the remote control unit to the REMOTE socket.
2. Connect the digital-type DC voltmeter to TP. 1 on the POWER/CONTROL PCB (See Fig. 4-14).
3. Temporarily adjust RV902 so that voltage at TP. 1 becomes +1.32 V.
4. Even though the number on the CPS display is increased by one each time the CPS button on the remote control unit is pressed, adjust RV902 until its number is not increased.
5. Adjust RV902 while pressing the CPS button on the remote control unit so as to find the beginning point at which the CPS display's number is increased when the CPS button is pressed.
6. Adjust RV902 so that voltage at TP. 1 goes into +0.04 V than the value at the above beginning point.

4-11 リモート・コントロール基準電圧調整 (V-900X/V-800X)

リモート・コントロール・ユニットRC-203（別売）を使用する場合は，次の調整が必要です．

1．リモコン・ユニットをリモート・コントロール・ジャックに接続する．
2．デジタル式直流電圧計をPOWER/CONTROL PCB上のTP.1に接続する（Fig. 4-14参照）
3．TP.1の電圧が＋1.32Vとなるようにに RV-902を仮調整する．
4．リモコン・ユニット上のCPSスイッチを一度ずつ押すと〔CPS〕ディスプレイの数字が1つずつふえるが，RV-902を調整してふえないようにする．
5．〔CPS〕ディスプレイの数字がふえる開始点をリモコンのCPSスイッチを押しながらRV-902を調整して求める．
6．TP.1の電圧が上記の開始点に於ける値より＋0.04Vになるようにに RV-902を調整する．

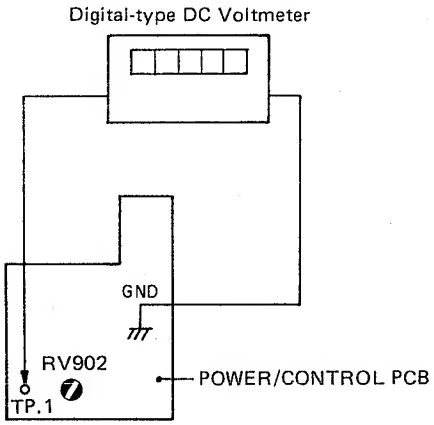

Fig. 4-14

4-12 VOLTAGE CONVERSION (FOR GENERAL EXPORT MODELS)

ALWAYS DISCONNECT THE POWER LINE CORD BEFORE MAKING THESE CHANGES.

1. Locate the voltage selector on the rear panel as shown in the illustration.
2. Using a regular (slot blade) screwdriver, turn the selector so that the desired voltage indication aligns with the arrow mark.

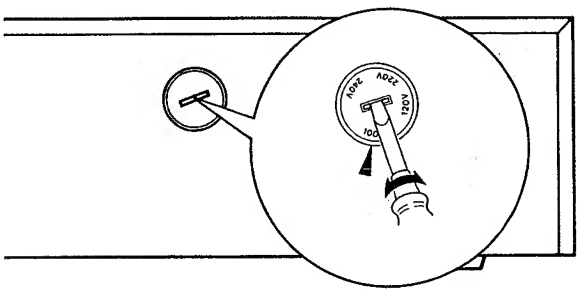

Fig. 4-15

5 ELECTRICAL CHECKS AND ADJUSTMENTS

アンプ部の確認と調整

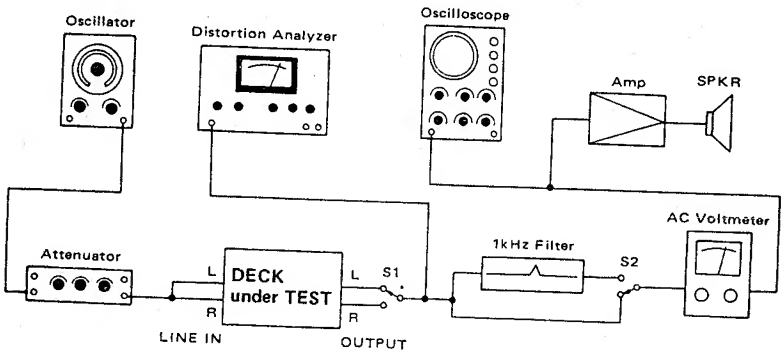

Fig. 5-1 Basic test setup 基本測定接続図

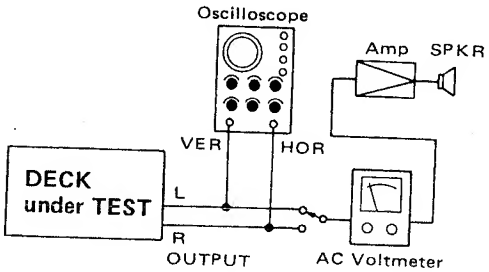

Fig. 5-2 Test setup for azimuth check
位相測定接続図

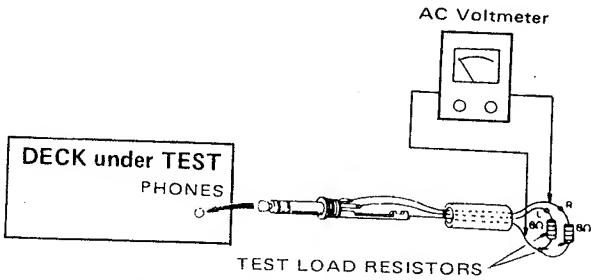

Fig. 5-6 Test setup for PHONES check
ホーン出力測定接続図

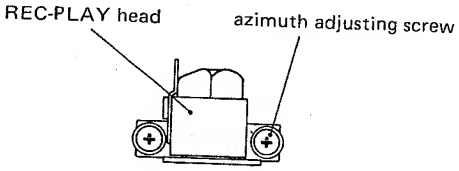

Fig. 5-3 Azimuth screw location
位相調整ネジ

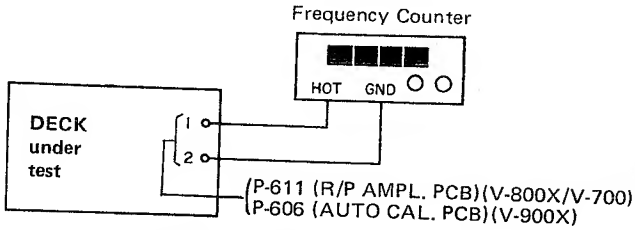

Fig. 5-7 Bias osc. frequency check
バイアス発振周波数チェック

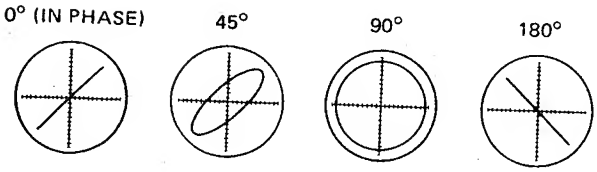

Fig. 5-4 Confirming phase relationship
位相

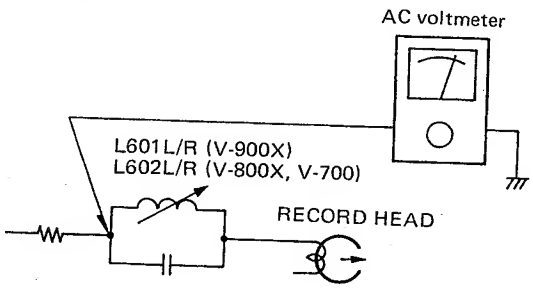

Fig. 5-8 Bias trap (recording) check
録音系バイアス・トラップ・チェック

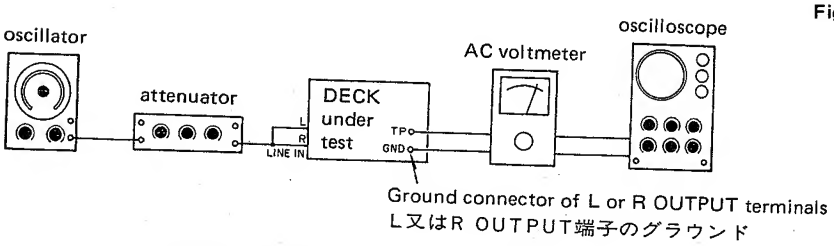

Fig. 5-5 Test setup for items 2, 8 and 12
2, 8及び12項の場合の接続

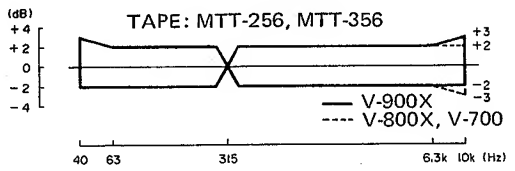

Fig. 5-9 Playback frequency response
再生周波数特性

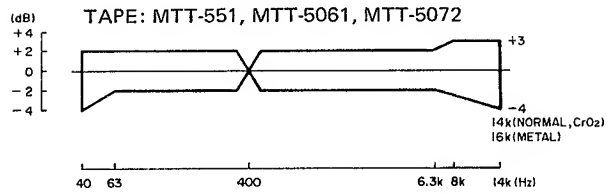

Fig. 5-10 Overall frequency response (NR OUT)
録再周波数特性

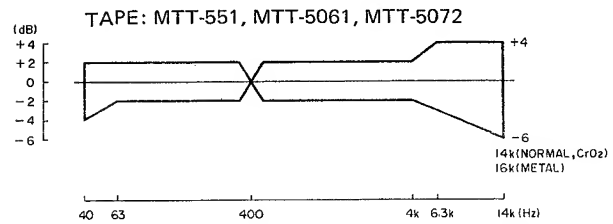

Fig. 5-11 Overall frequency response (DOLBY B)
録再周波数特性

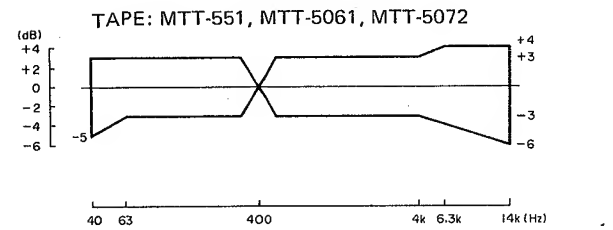

Fig. 5-12 Overall frequency response (DOLBY C, DBX)
録再周波数特性

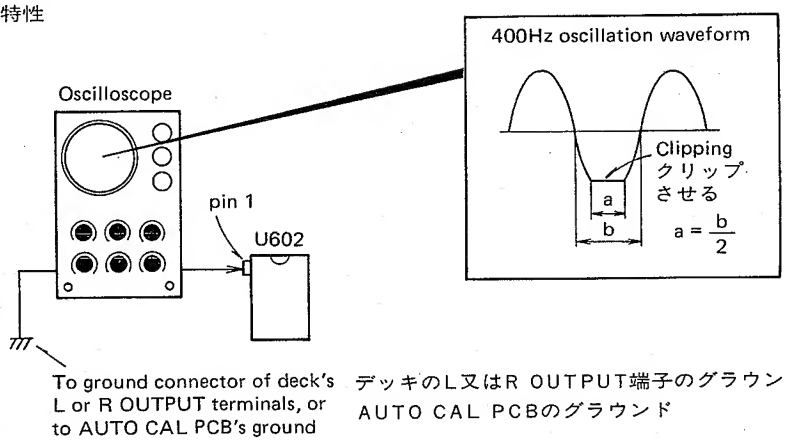

Fig. 5-13 Auto cal. test signal adjustment (1)
オート・キャリブレーション・テスト信号調整(1)

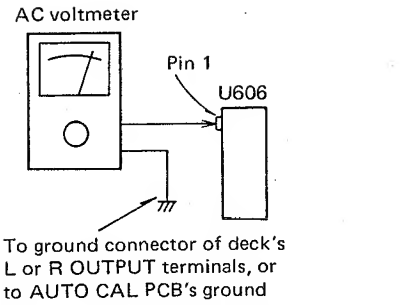

Fig. 5-14 Auto cal. test signal adjustment (2)
オート・キャリブレーション・テスト信号調整(2)

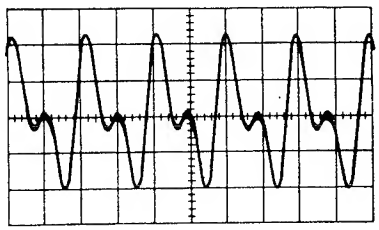

Fig. 5-15 RMS symmetry adjustment (incorrect)
RMSシンメトリ調整・不良

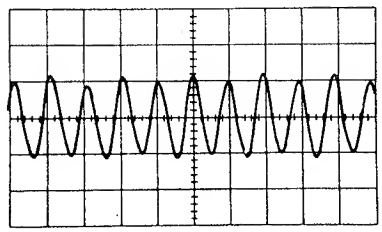

Fig. 5-16 RMS symmetry adjustment (correct)
RMSシンメトリ調整・良

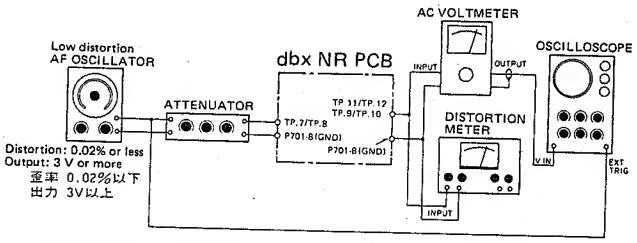

Fig. 5-17 Encoder adjustment setup エンコーダ調整時の接続

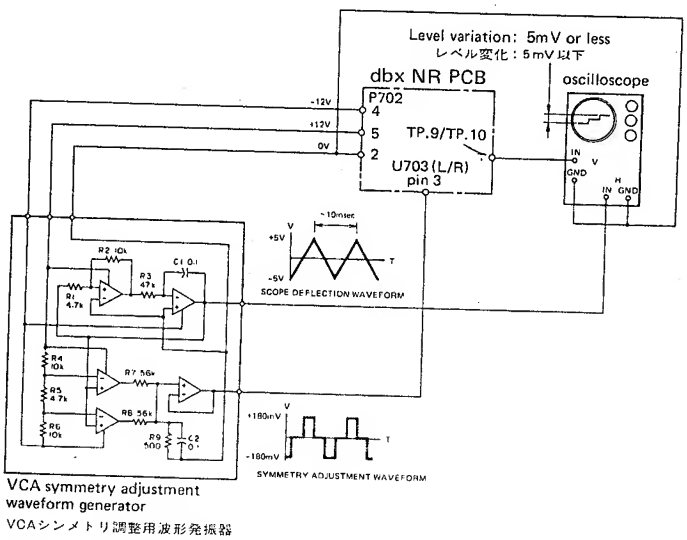

Fig. 5-18 VCA symmetry adjustment setup (encoder) VCA シンメトリ調整時の接続(エンコーダ)

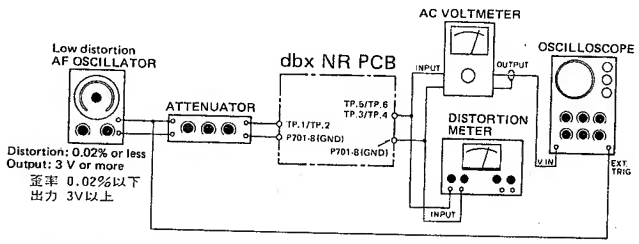

Fig. 5-19 Decoder adjustment setup デコーダ調整時の接続

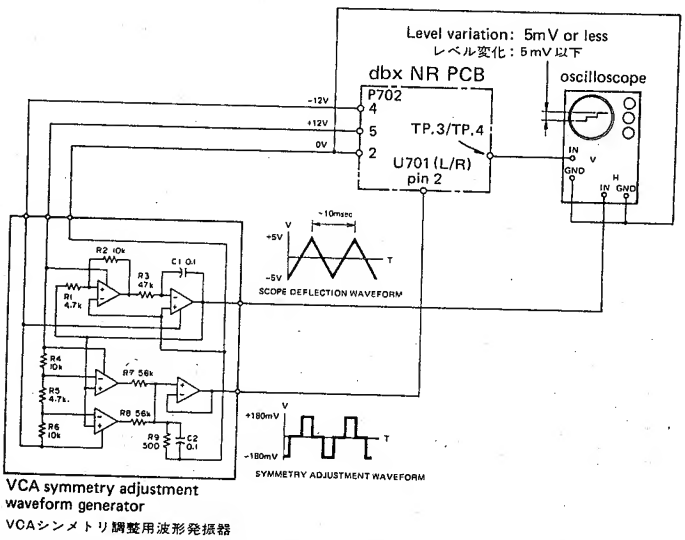

Fig. 5-20 VCA symmetry adjustment setup (decoder) VCA シンメトリ調整時の接続(デコーダ)

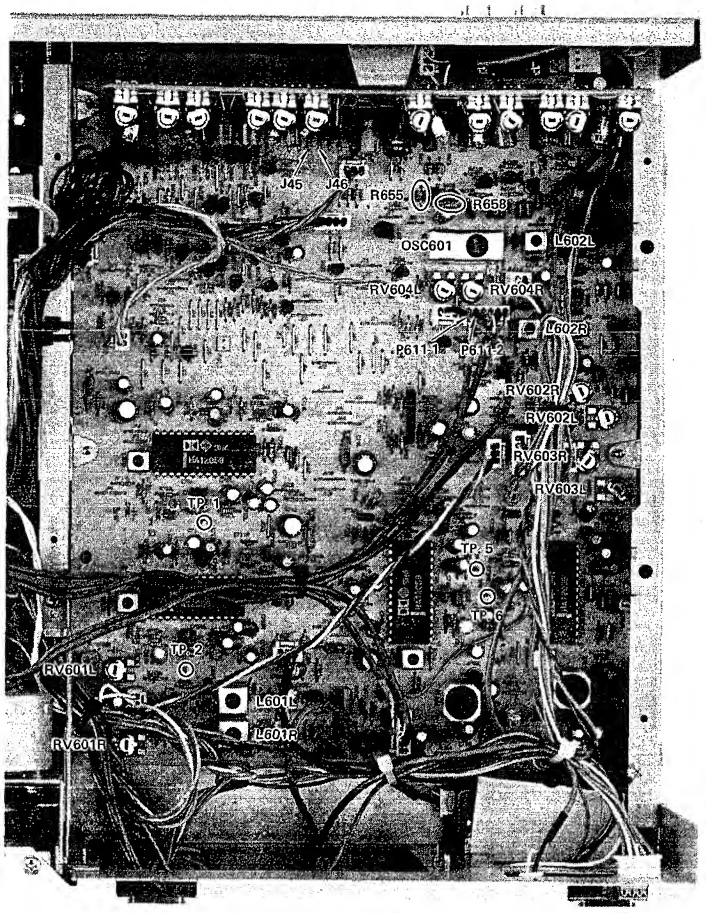

Fig. 5-21 R/P AMPL. PCB

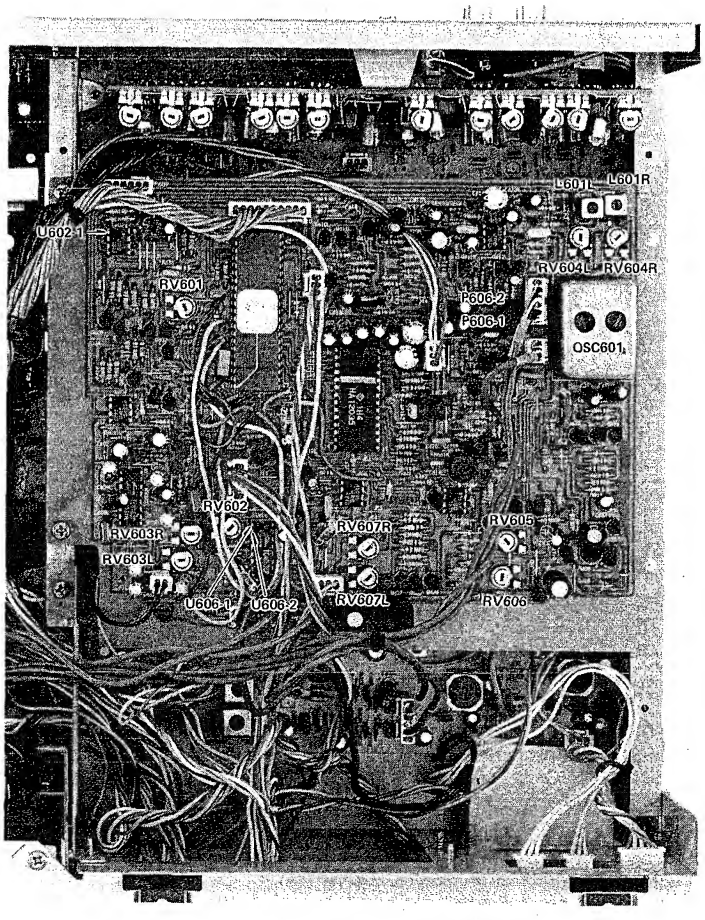

Fig. 5-22 AUTO CAL. PCB (V-900X)

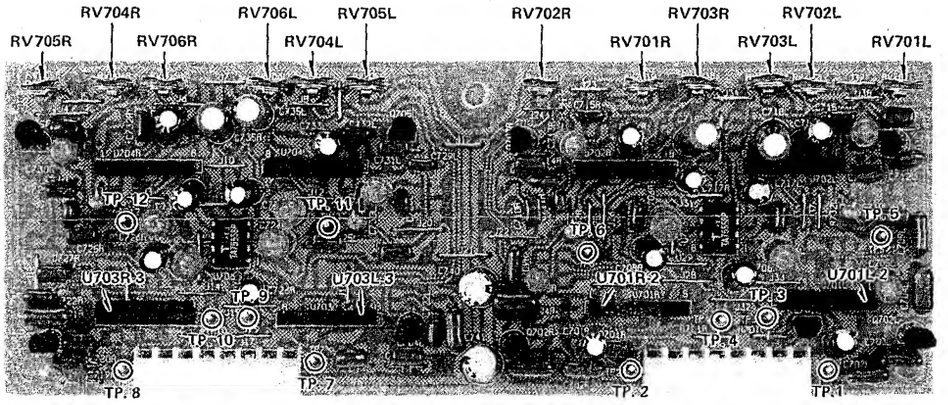

Fig. 5-23 dbx NR PCB (V-900X/V-800X)

R/P AMPL. PCB

			MODEL		
RV601L/RV601R	Playback level	再生レベル	V-900X	V-800X	V-700
RV602L/RV602R	Record level	録音レベル		V-800X	V-700
RV603L/RV603R	Meter level	メータ・レベル	V-900X	V-800X	V-700
RV604L/RV604R	Overall freq. response (METAL)	録再周波数特性(METAL)		V-800X	V-700
R655 (RV605)	Overall freq. response (CrO_2)	録再周波数特性(CrO_2)		V-800X	V-700
R658 (RV606)	Overall freq. response (NORMAL)	録再周波数特性(NORMAL)		V-800X	V-700
L601L/L601R	Bias trap (playback)	再生系バイアス・トラップ	V-900X	V-800X	V-700
L602L/L602R	Bias trap (recording)	録音系バイアス・トラップ		V-800X	V-700
OSC601	Bias osc. frequency	バイアス発振周波数		V-800X	V-700

AUTO CAL. PCB (V-900X)

RV601	Auto calibration test signal (1)	オート・キャリブレーション・テスト信号(1)
RV602	Auto calibration test signal (2)	オート・キャリブレーション・テスト信号(2)
RV603L/RV603R	Record level	録音レベル
RV604L/RV604R	Overall freq. response (NORMAL)	録再周波数特性(NORMAL)
RV605	Overall freq. response (CrO_2)	録再周波数特性(CrO_2)
RV606	Overall freq. response (METAL)	録再周波数特性(METAL)
RV607L/RV607R	Auto calibration	オート・キャリブレーション
L601L/L601R	Bias trap (recording)	録音系バイアス・トラップ
OSC601	Bias osc. frequency	バイアス発振周波数

dbx NR PCB (V-900X, V-800X)

DECODER (デコーダ)	RV701L/RV701R	VCA SYM	VCAシンメトリー
	RV702L/RV702R	Nominal level	基準レベル
	RV703L/RV703R	RMS SYM	RMSシンメトリー
ENCODER (エンコーダ)	RV704L/RV704R	VCA SYM	VCAシンメトリー
	RV705L/RV705R	Nominal level	基準レベル
	RV706L/RV706R	RMS SYM	RMSシンメトリー

PRECAUTIONS

1. Since this deck has an automatic tape selector, be sure to use test tapes that have tape position detecting holes.
2. Before performing adjustments and checks, clean and demagnetize the entire tape path.
3. Make sure the deck is properly set for the voltage in your locality.
4. In general, adjustments and checks are made in the order of L-ch then R-ch.
   A note for alphanumeric codes with "L/R" suffixed in parenthesis; RV901(L/R), for example, means RV901L and RV901R, where L indicates left channel and R, right channel.
   For the double test point designations with a slash between, such as TP.1/TP.2, they also indicate the test points of left and right channels respectively.
5. 0 dB is referenced to 0.775 V. If an AC voltmeter that references 0 dB to 1 V is used, appropriate compensation should be made.
6. The AC voltmeter used in the procedures must have an input impedance of 1MΩ or more.

MONITOR switch	**SYNC (V-900X), or TAPE (V-800X/V-700)**
NR SYSTEM switch	**OUT**
MPX FIL (ter) switch	**off**
RECORD control	**Min.**
OUTPUT control	**Max.**
BIAS FINE control (V-800X/V-700)	**Center detent position**
AUTO CALIBRATION switch (V-900X)	**REFERENCE**

Table 1

5-1 PLAYBACK PERFORMANCE

TEAC test tapes:

MTT-150:	For Dolby level calibration
MTT-256:	For playback frequency response check for NORMAL
MTT-356:	For playback frequency response check for CrO_2, METAL
MTT-551:	For S/N check with NORMAL

ITEM	SETTING	INPUT SIGNAL	ADJUST (or CHECK)	MEASURING POINT: RESULT	REMARKS
1. REC·PLAY head azimuth	Connection: Fig. 5-2 Settings: Table 1	MTT-150	Check	OUTPUT: Phase: within 45°	Refer to Fig. 5-4
		MTT-356 (12.5 kHz)	Azimuth screw of R.P head (Fig. 5-3)	OUTPUT: Max. output at L-& R-ch's (on VTVM)	
2. Playback output level	Same as above Connection: Fig. 5-5, but do not connect LINE IN (L/R).	MTT-150	RV601 (L/R)	TP.1/TP.2 (R/P AMPL. PCB): 580mV (−2.5 dB)	
	Connection: Fig. 5-1		Check	OUTPUT: 490 mV (−4 dB) ± 1 dB (436 mV to 548 mV)	
3. PHONES output level	Same as above Connection: Fig. 5-6	MTT-150	Check	PHONES: 250 mV (−9.8 dB) ± 3 dB (177 mV to 353 mV)	8 Ω load
4. Playback frequency response	Same as above Connection: Fig. 5-1	MTT-256	Check	OUTPUT: Standard: Fig. 5-9	
		MTT-356	Check	OUTPUT: Standard: Fig. 5-9	
5. Playback S/N ratio	Same as above	MTT-551	Check	OUTPUT: S/N: 47 dB min.	

5-2 MONITOR PERFORMANCE

- Mode: STOP
- MONITOR switch: SYNC (V-900X), or SOURCE (V-800X/V-700)
- OUTPUT control: Max.

ITEM	SETTING	INPUT SIGNAL	ADJUST (or CHECK)	MEASURING POINT: RESULT	REMARKS
6. Min. LINE input level	Connection: Fig. 5-5 RECORD cont.: Max.	LINE IN: 400Hz/86.9mV(-19dB)	Check	TP.5/TP.6: 580mV(-2.5dB)±3dB (411 mV to 0.820 V)	
	Connection: Fig. 5-1		Check	OUTPUT: 490mV(-4dB)±3dB (346mV to 690mV)	
7. Min. MIC input level	Same as above Connection: Fig. 5-5	MIC: 400Hz/346μV(-67dB)	Check	TP.5/TP.6: 580mV(-2.5dB)±3dB (411 mV to 0.820 V)	
	Connection: Fig. 5-1		Check	OUTPUT: 490mV(-4dB)±3dB (346mV to 690mV)	
8. Specified LINE input level	Same as above Connection: Fig. 5-5	LINE IN: 400 Hz/-9dB (275 mV)	RECORD cont.*	TP.5/TP.6 (R/P AMPL. PCB): 580mV (-2.5dB)	*After adjusting, do not disturb (Specified position)
	Connection: Fig. 5-1		Check	OUTPUT: 490mV(-4dB)±3dB (346mV to 690 mV)	
9. PEAK PROGRAM LEVEL METER	Same as above RECORD cont.: Specified position	LINE IN: 400Hz/-9dB (275 mV)	RV603 (L/R)	PEAK PROGRAM LEVEL METER: 0 dB lit	

5-3 RECORDING PERFORMANCE

- Mode: REC/PLAY (Unless otherwise specified)
- MONITOR switch: SYNC (V-900X), or TAPE (V-800X/V-700)
- RECORD control: Specified position (position set at item 8)
- OUTPUT control: Max.

TEAC test tapes:

MTT-5072: For METAL record test
MTT-5061: For CrO_2 record test
MTT-551: For NORMAL record test

ITEM	SETTING	INPUT SIGNAL	ADJUST (or CHECK)	MEASURING POINT: RESULT	REMARKS
10. Bias osc. frequency	Connection: Fig. 5-7 Mode: REC/PAUSE	–	OSC601	Refer to Fig. 5-7: Bias osc. freq.: 100kHz ± 3 kHz	
11. Bias trap (recording)	Same as above Connection: Fig. 5-8 Mode: REC/PAUSE	–	L601 (L/R)*1 L602 (L/R)*2	Refer to Fig. 5-8: Min. bias leakage	*1 V-900X *2 V-800X /V-700
12. Bias trap (playback)	Same as above Connection: Fig. 5-5 Mode: REC/PLAY (with empty cassette loaded)	–	L601 (L/R)	TP.1/TP.2 (R/P AMPL. PCB): Min. bias leakage	
13. Record level (V-900X)	After adjusting overall frequency response (item 14), re-do this item's checks and adjustments.				
	Same as above Connection: Fig. 5-1 Mode: STOP	LINE IN: 400 Hz/-34 dB (15.5 mV)	Check	OUTPUT: -29dB (27.5 mV)*	* Give actually-measured level as ref. level (1)
	Mode: REC/PLAY Tape: MTT-551		RV603 (L/R)	OUTPUT: Difference against ref. level (1): 0 dB	
	Tape: MTT-5072		Check	OUTPUT: Difference against ref. level (1): ± 1 dB	
	Tape: MTT-5061		Check		

ITEM	SETTING	INPUT SIGNAL	ADJUST (or CHECK)	MEASURING POINT: RESULT	REMARKS
14. Overall frequency response (V-900X)	Adjust in the order of (1) (2) (3) Since record level varies after making this item instruction adjustments, re-do checks and adjustments shown in items 13 and 14				
	(1) Same as above Tape: MTT-551	LINE IN: 400 Hz & 16 kHz alternately/–34 dB (15.5 mV)	RV604 (L/R)	OUTPUT: 16kHz output against that of 400Hz: ±1 dB	Standard: Fig. 5-10
	(2) Tape: MTT-5072		RV606 (common to L,R)	OUTPUT: 16kHz output against that of 400 Hz: ±2 dB	
	(3) Tape: MTT-5061		RV605 (common to L,R)		
15. Record level (V-800X/V-700)	After adjusting overall frequency response (item 16), re-do this item's checks and adjustments.				
	Same as above Connection: Fig. 5-1 MONITOR sw: SOURCE	LINE IN: 400Hz/–34 dB (15.5 mV)	Check	OUTPUT: –29 dB (27.5 mV)*	* Give actually-measured level as ref. level (2)
	MONITOR sw: TAPE Mode: REC/PLAY Tape: MTT-5072		RV602 (L/R)	OUTPUT: Difference against ref. level (2): 0 dB	
	Tape: MTT-5061		Check	OUTPUT: Difference against ref. level (2): ±1 dB	
	Tape: MTT-551		Check		
16. Overall frequency response (V-800X/V-700)	Adjust in the order of (1) (2) (3) Since record level varies after making this item instruction adjustment, re-do checks and adjustments shown in items 15 and 16.				
	(1) Same as above Tape: MTT-5072	LINE IN: 400Hz & 16 kHz alternately/–34 dB (15.5 mV)	RV604 (L/R)	OUTPUT: 16 kHz output against that of 400Hz: ±1dB	Standard: Fig. 5-10
	(2) Tape: MTT-5061		R655 (RV605) (common to L, R)	OUTPUT: 16 kHz output against that of 400Hz: ±2dB	
	(3) Tape: MTT-551		R658 (RV606) (common to L, R)		
17. Total harmonic distortion	MTT-551 MTT-5061 MTT-5072	LINE IN: 400 Hz/–9 dB (275 mV)	Check	OUTPUT: 2.5% or less for all tape positions	
18. Signal-to-noise ratio	"	LINE IN: 400 Hz/–9 dB (275 mV) ↓ no signal	Check	OUTPUT: NORMAL 45 dB min. CrO_2 46 dB min. METAL 46 dB min. When NR SYSTEM is set to dbx, 65 dB min. for all tape positions	
19. Erase efficiency	• Connection is same as in Fig. 5-1, but engage 1-kHz filter. • Record a 1-kHz signal. Rewind tape to midpoint of recorded portion. Record a "no signal" portion. Find the difference between the 1-kHz portion and the "no signal" portion.				
	MTT-551 MTT-5061 MTT-5072	LINE IN: 1 kHz/+1 dB (0.869 V) ↓ no signal	Check	OUTPUT: 65 dB min. ratio	
20. Channel separation	• Connection: Fig. 5-1, but do not connect LINE IN (R), and engage 1-kHz filter. • Set the deck to record mode. Find the difference between the 1-kHz recorded portion (L-ch) and the "no-signal" portion (R-ch). Then change the connection and check reverse operation.				
	MTT-551	LINE IN: L-ch 1 kHz/–9 dB (275 mV) R-ch No signal	Check	OUTPUT: 30 dB min. ratio	
21. Adjacent track crosstalk	• Connection: Fig. 5-1, but do not connect LINE IN (L) and OUTPUT (L). • Record a 125-Hz signal on R-ch and note output level. Invert tape and play R-ch track. Check leakage level against the output reference of previously recorded portion.				
	MTT-551	LINE IN: L-ch No signal R-ch 125 Hz/–9 dB (275 mV)	Check	OUTPUT: 40 dB min. ratio	

ITEM	SETTING	INPUT SIGNAL	ADJUST (or CHECK)	MEASURING POINT: RESULT	REMARKS
22. REC MUTE function	• Connection: Fig. 5-1, but engage 1-kHz filter. • Record a 1-kHz signal. Push REC MUTE button for several seconds. (At this time, make sure LED on the button lights). Rewind and play the tape. Find the difference between the 1-kHz portion and the "no-signal" portion.				
	MTT-551 MTT-5061 MTT-5072	LINE IN: 1 kHz/+1 dB (0.869 V) ↓ no signal	Check	OUTPUT: 65 dB min. ratio	
23. Dolby NR effect (B-type)	• Record a 1-kHz signal with NR SYSTEM switch OUT. Play this portion with NR SYSTEM switch set first to OUT, then to DD B. Obtain the difference in output level between OUT and DD B positions. Repeat the above process using a 10-kHz signal.				
	MTT-5061	LINE IN: 1 kHz/–29 dB (27.5 mV)	Check	OUTPUT: Variation 3 dB ~ 8 dB	
		LINE IN: 10 kHz/–39 dB (8.69 mV)	Check	OUTPUT: Variation 8 dB ~ 10 dB	
24. Dolby NR effect (C-type)	• Repeat the same procedure as above, only see that the NR SYSTEM switch is set to DD C.				
	MTT-5061	LINE IN: 1 kHz/–39 dB (8.69 mV)	Check	OUTPUT: Variation 16 dB ~ 20 dB	
		LINE IN: 10 kHz/–49 dB (2.75 mV)	Check	OUTPUT: Variation 16 dB ~ 20 dB	
25. Auto calibration test signal adjustment (V-900X)	Same as above Connection: Fig. 5-13 Mode: STOP	—	RV601	U602-1 Adjust to get 400Hz oscillation waveform shown in Fig. 5-13	
	Connection: Fig. 5-14	—	RV602	U606-1 400Hz level: 5 mV	
26. Auto calibration adjustment (V-900X)	Connection: Fig. 5-1 Mode: STOP Tape: MTT-551 RV607(L/R): Set temporarily like right figure			• Temporarily setting of RV607 (L/R) 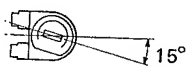 15° viewed from top of deck	
	Press AUTO CAL switch ↓ Deck does the auto calibration process (AUTO indicator blinks). ↓ After completing auto calibration (AUTO indicator remains lit), deck enters the REC/PAUSE mode.			NOTE: If temporary setting is not done, deck may invite error calibration. In this case, after completing auto calibration, deck enters the STOP mode and REF indicator lights.	
	Mode: REC/PAUSE (after auto calibration) ↓ REC/PLAY	—	RV607 (L/R)	OUTPUT: Adjust for output in REC/PLAYmode ("off-the-tape" signal monitored) to become almost the same level* as one in REC/PAUSE mode (the source signal monitored). *–29 dB ± 0.5 dB (25.9 mV to 29.1 mV)	

5-4 dbx NR PCB ADJUSTMENT (V-900X/V-800X)

Note:

1. Since the dbx NR PCB assembly has been precisely adjusted at the factory, this adjustment is not usually needed unless any of the trimmers have been changed, or any conponents on the PCB have sustained damage.
2. As a necessary procedure for the ENCODING ADJUSTMENT only, disconnect either end of each jumper of J45 and J46 on the R/P AMPL. PCB. (For their location see Fig. 5-21.)
3. Make the following initial settings.
   - POWER switch: ON
     NR SYSTEM switch: OUT
   - All other front panel switches and controls have no effect on this adjustment.

5-4-1 ENCODING ADJUSTMENT

ITEM	SETTING	INPUT SIGNAL	ADJUST (or CHECK)	MEASURING POINT: RESULT	REMARKS
1. RMS SYM	Fig. 5-17	TP.7/TP.8 100 Hz/–8.2 dB (300 mV)	RV706(L/R)	TP.11/TP.12 Clean 200 Hz sine-wave	Refer to Figs. 5-15 and 5-16.
2. Encoding level	Fig. 5-17	TP.7/TP.8 400 Hz/–8.2 dB*1 (300 mV)	RV705(L/R)	TP.9/TP.10 -8.2 dB*2 (300 mV)	*1 Reference 1 *2 Reference 2
3. VCA SYM	Fig. 5-18	U703L-3/U703R-3 staircase wave	RV704(L/R)	TP.9/TP.10 A relatively straight horizontal line on the 'scope face'. (Level variation: 5 mV or less)	
4. Encoding single frequency response	Fig. 5-17	TP. 7/TP.8 100 Hz/–8.2 dB (300 mV)	Check	TP.9/TP.10 +0.2 dB ± 0.5 dB against Ref. 2 (290 mV ~ 325 mV)	
		TP.7/TP.8 10 kHz/–8.2 dB (300 mV)	Check	TP.9/TP.10 –3.3 dB ± 0.5 dB against Ref. 2 (194 mV ~ 217 mV)	
5. Encoding operation level	Fig. 5-17	TP.7/TP.8 400 Hz/–68.2 dB*3 (300μV)	Check	TP.9/TP.10 –30 dB ± 0.5 dB against Ref. 2 (8.96 mV ~ 10.1 mV)	*3 –60 dB against Ref. 1
		TP.7/TP.8 400 Hz/+11.8 dB*4 (3.00 V)	Check	TP.9/TP.10 +10 dB ± 0.5 dB against Ref. 2 (0.896 V ~ 1.01 V) Distortion: 0.3% or less	*4 +20 dB against Ref. 1

5-4-2 DECODING ADJUSTMENT

ITEM	SETTING	INPUT SIGNAL	ADJUST (or CHECK)	MEASURING POINT: RESULT	REMARKS
6. RMS SYM	Fig. 5-19	TP.1/TP.2 100 Hz/-8.2 dB (300 mV)	RV703 (L/R)	TP.5/TP.6 Clean 200 Hz sine-wave	Refer to Figs. 5-15 and 5-16.
7. Decoding level	Fig. 5-19	TP.1/TP.2 400 Hz/-8.2 dB*1 (300 mV)	RV702 (L/R)	TP.3/TP.4 -8.2 dB*2 (300 mV)	*1 Reference 1 *2 Reference 2
8. VCA SYM	Fig. 5-20	U701L-2/U701R-2 staircase wave	RV701 (L/R)	TP.3/TP.4 A relatively straight horizontal line on the 'scope face'. (Level variation: 5 mV or less)	
9. Decoding single frequency response	Fig. 5-19	TP.1/TP.2 100 Hz/-8.2 dB (300 mV)	Check	TP.3/TP.4 -0.2 dB ± 1 dB against Ref. 2 (261 mV ~ 329 mV)	
		TP.1/TP.2 10 kHz/-8.2 dB (300 mV)	Check	TP.3/TP.4 +5.5 dB ± 1 dB against Ref. 2 (504 mV ~ 634 mV)	
10. Decoding operation level	Fig. 5-19	TP.1/TP.2 400 Hz/-38.2 dB*3 (9.49 mV)	Check	TP.3/TP.4 -60 dB ± 1 dB against Ref. 2 (267μV ~ 337μV)	*3 -30 dB against Ref. 1
		TP.1/TP.2 400 Hz/+1.8 dB*4 (0.949 V)	Check	TP.3/TP.4 +20 dB ± 1 dB against Ref. 2 (2.67 V ~ 3.37 V)	*4 +10 dB against Ref. 2

準備

1．本機はテープ・セレクタ自動検出機構になっていますので，テスト・テープは必ずテープ・ポジション検出孔のあるものを使用して下さい．
2．アンプ部の調整の前に，消去ヘッド，録・再ヘッド，テープ走行部分それぞれを充分消磁し，クリーナー液で清掃して下さい．
3．特に指示の有る場合を除き，Lch，Rch の順に調整を行なって下さい．
4．レベル計は入力インピーダンス 1MΩ 以上のものを使用して下さい．
5．0dB＝0.775V
6．調整に際して各スイッチを次のように設定して下さい．

MONITORスイッチ	SYNC(V-900X)，又は TAPE(V-800X/V-700)
NR SYSTEMスイッチ	OUT
MPX FILスイッチ	OFF
RECORDつまみ	最小
OUTPUTつまみ	最大
BIAS FINEつまみ (V-800X/V-700)	中央(クリック位置)
AUTO CALIBRATION スイッチ(V-900X)	REFERENCE

表 1

5-1 再生系

調整項目	準備・設定	入力信号	調整個所	測定個所・調整値	備考
1．録・再ヘッド・アジマス調整	接続：Fig.5-2 設定：表 1	MTT-150	チェック	OUTPUT：位相：45°以内	Fig.5-4参照
		MTT-356 (12.5kHz区分)	録・再ヘッドのアジマス調整ネジ (Fig.5-3)	OUTPUT：L，R共最大出力	
2．再生出力レベル	同上 接続：Fig.5-5 (但し，LINE INへは接続不要)	MTT-150	RV601(L/R)	TP.1/TP.2(R/P AMPL. PCB)：580mV(−2.5dB)	
	接続：Fig.5-1		チェック	OUTPUT：490mV(−4dB)±1dB	
3．PHONES出力レベル・チェック	同上 接続：Fig.5-6	MTT-150	チェック	PHONES：250mV(−9.8dB)±3dB	8Ω負荷
4．再生周波数特性	同上 接続：Fig.5-1	MTT-256	チェック	OUTPUT：規格：Fig.5-9	
		MTT-356	チェック	OUTPUT：規格：Fig.5-9	
5．再生S/N	同上	MTT-551	チェック	OUTPUT：S/N：47dB以上	

5-2 モニタ系

・モード：STOP
・MONITORスイッチ：SYNC(V-900X)，又はSOURCE(V-800X/V-700)
・OUTPUTつまみ：最大

調整項目	準備・設定	入力信号	調整個所	測定個所・調整値	備考
6．LINE最小入力レベル	接続：Fig.5-5 RECORDつまみ：最大	LINE IN：400Hz/86.9mV(−19dB)	チェック	TP.5/TP.6：580mV(−2.5dB)±3dB	
	接続：Fig.5-1		チェック	OUTPUT：490mV(−4dB)±3dB	
7．MIC最小入力レベル	同上 接続：Fig.5-5	MIC：400Hz/346μV(−67dB)	チェック	TP.5/TP.6：580mV(−2.5dB)±3dB	
	接続：Fig.5-1		チェック	OUTPUT：490mV(−4dB)±3dB	
8．LINE規定入力レベル	同上 接続：Fig.5-5	LINE IN：400Hz/−9dB	RECORDつまみ*	TP.5/TP.6(R/P AMPL. PCB)：580mV(−2.5dB)	*調整後，動かさないこと．(規定位置)
	接続：Fig.5-1		チェック	OUTPUT：490mV(−4dB)±3dB	
9．メータ・レベル・セット	同上 RECORDつまみ：規定位置	LINE IN：400Hz/−9dB	RV603(L/R)	ピーク・プログラム・レベル・メータ：0dB点灯	

5-3 録音系

・モード：REC/PLAY(特に指示してある場合を除く)
・MONITORスイッチ：SYNC(V-900X), 又はTAPE(V-800X/V-700)
・RECORDつまみ：規定位置(8項での設定位置)
・OUTPUTつまみ：最大
・信号入力個所：LINE IN(特に指示してある場合を除く)
・測定個所：OUTPUT(特に指示してある場合を除く)

調整項目	準備・設定	入力信号	調整個所	測定個所・調整値	備考
10. バイアス発振周波数調整	接続：Fig.5-7 モード：REC/PAUSE	——	OSC601	Fig.5-7参照： バイアス発振周波数：100kHz±3kHz	
11. 録音系バイアス・トラップ調整	同上 接続：Fig.5-8 モード：REC/PAUSE	——	L601(L/R)*1 L602(L/R)*2	Fig.5-8参照 バイアス漏れ最小	*1 V-900X *2 V-800X/V-700
12. 再生系バイアス・トラップ調整	同上 接続：Fig.5-5 モード：REC/PLAY (空テープ装てん)	——	L601(L/R)	TP.1/TP.2：(R/P AMPL. PCB) バイアス漏れ最小	
13. 録音レベル・セット (V-900X)	本確認・調整は録再周波数特性調整(14項)後，再度行うこと.				
	同上 接続：Fig.5-1 モード：STOP	LINE IN 400Hz/−34dB	チェック	OUTPUT： −29dB*	*実測値を基準レベル(1)とする.
	モード：REC/PLAY テープ：MTT-551		RV603(L/R)	OUTPUT： 基準レベル(1)との差：0dB	
	テープ：MTT-5072		チェック	OUTPUT： 基準レベル(1)との差：±1dB	
	テープ：MTT-5061		チェック		
14. 録再周波数特性 (V-900X)	下記の調整順序(1)～(3)を守ること. 本調整後，録音レベルが変わるので，再度13項及び14項の確認・調整を行うこと.				
	(1) 同上 テープ：MTT-551	LINE IN： 400Hz/−34dB 16kHz/−34dB 繰返し	RV604(L/R)	OUTPUT： 16kHz出力が400Hz出力に対して：±1dB	規格：Fig.5-10
	(2) テープ：MTT-5072		RV606(L, R共通)	OUTPUT： 16kHz出力が400Hz出力に対して ±2dB	規格：Fig.5-10
	(3) テープ：MTT-5061		RV605(L, R共通)		規格：Fig.5-10
15. 録音レベル・セット (V-800X/V-700)	本確認・調整は録再周波数特性調整(16項)後，再度行うこと.				
	同上 接続：Fig.5-1 MONITORスイッチ：SOURCE	LINE IN： 400Hz/−34dB	チェック	OUTPUT： −29dB*	*実測値を基準レベル(2)とする.
	MONITORスイッチ：TAPE モード：REC/PLAY テープ：MTT-5072		RV602(L/R)	OUTPUT： 基準レベル(2)との差：0dB	
	テープ：MTT-5061		チェック	OUTPUT： 基準レベル(2)との差：±1dB	
	テープ：MTT-551		チェック		
16. 録再周波数特性 (V-800X/V-700)	下記の調整順序(1)～(3)を守ること. 本調整後，録音レベルが変わるので，再度15項及び16項の確認・調整を行うこと.				
	(1) 同上 テープ：MTT-5072	LINE IN： 400Hz/−34dB 16kHz/−34dB 繰返し	RV604(L/R)	OUTPUT： 16kHz出力が400Hz出力に対して：±1dB	規格：Fig.5-10
	(2) テープ：MTT-5061		R655(RV605) (L, R共通)	OUTPUT： 16kHz出力が400Hz出力に対して ±2dB	規格：Fig.5-10
	(3) テープ：MTT-551		R658(RV606) (L, R共通)		規格：Fig.5-10

調整項目	準備・設定	入力信号	調整個所	測定個所・調整値	備考
17. 総合歪率	MTT-551	400Hz/−9dB	チェック	NORMAL 2.5%以下	
	MTT-5061			CrO_2 2.5%以下	
	MTT-5072			METAL 2.5%以下	
18. 総合S/N	MTT-551	400Hz/−9dB	チェック	NORMAL 45dB以上	NR SYSTEM：dbxの時，全テープ・ポジションで65dB以上
	MTT-5061			CrO_2 46dB以上	
	MTT-5072			METAL 46dB以上	
19. 消去率チェック	MTT-551	1kHz/+1dB	チェック	録音部分を再生した時のレベルを基準レベルとし，録音部分を消去した時の出力レベルとの差 65dB以上	1kHz B.P.F.使用
	MTT-5061				
	MTT-5072				
20. チャンネル間セパレーション・チェック	MTT-551	Lch 1kHz/−9dB Rch 無信号	チェック	Lch再生レベルを基準とし，Rchとの出力レベルの差 30dB以上	1kHz B.P.F.使用
			LchとRchの信号を入れかえた場合についてもチェックすること		
21. トラック間クロストーク・チェック	同　上	Lch 無信号 Rch 125Hz/−9dB	チェック	録音されたトラックを再生したときの出力レベルを基準レベルとし，テープを反転して再生したときのRch出力レベルとの差 40dB以上	
22. REC MUTE効果チェック	MTT-551	1kHz/+1dB	チェック	1kHzを録音し，途中でREC MUTE釦を押して無信号録音部分を作る．このテープを再生したときの信号部分と無信号部分との出力レベル差 65dB以上(1kHz B.P.F.使用)	
	MTT-5061				
	MTT-5072				
23. ドルビーNR効果チェック (B-TYPE)	MTT-5061	1kHz/−29dB	チェック	NR SYSTEMスイッチをOUT位置にして信号を録音する．次にこれを再生し，スイッチをOUT↔□□Bと切換えた時の出力レベル変化 3dB〜8dB	
		10kHz/−39dB	チェック	測定法：上と同じ 8dB〜10dB	
24. ドルビーNR効果チェック (C-TYPE)	MTT-5061	1kHz/−39dB	チェック	NR SYSTEMスイッチをOUT位置にして信号を録音する．次にこれを再生し，スイッチをOUT↔□□Cと切換えた時の出力レベル変化 16dB〜20dB	
		10kHz/−49dB	チェック	測定法：上と同じ 16dB〜20dB	
25. オート・キャリブレーション・テスト信号調整 (V-900X)	同　上 接続： Fig.5-13 モード： STOP	—	RV601	U602-1： 400Hz発振波形をFig.5-13に示す形になるように調整．	
	接続： Fig.5-14	—	RV602	U606-1： 400Hzレベル：5mV	
26. オート・キャリブレーション調整 (V-900X)	接続：Fig.5-1 モード：STOP テープ：MTT-551 RV607(L/R)：仮セット(右図)			・RV607(L/R)の仮セット 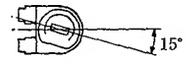 	
	AUTO CALスイッチを押す ↓ デッキはオート・キャリブレーション動作を行なう（AUTO インジケーター点滅） ↓ 動作完了後（AUTO インジケーター点灯），デッキは REC/PAUSEモードになる．			注意： 仮セットされていないとエラー処理になる場合がある． その場合はオート・キャリブレーション動作終了後，デッキはストップ・モードになり REF インジケーターが点灯する．	
	モード：REC/PAUSE(オート・キャリブレーション後の) ↓ REC/PLAY	—	RV607(L/R)	OUTPUT： REC/PAUSE時(ソース・モニター状態)の出力に対してREC/PLAY時(テープ・モニター状態)の出力が同一レベル* になるように調整する． *−29dB±0.5dB	

5-4 DBX基板単体調整 (V-900X/V-800X)

注1. DBXユニットは通常調整の必要はありません．もし調整する場合は以下の要領で行なって下さい．
注2. R/P AMPL. PCBのジャンパ線J45, J46(Fig. 5-21参照)を外す(エンコーダのみ)．
注3. NR SYSTEMスイッチをOUTにセットして下さい．
注4. 調整個所はFig. 5-23を参照して下さい．

5-4-1 エンコーダ調整

調整項目	準備・設定	入力信号	調整個所	測定個所・調整値	備考
1．RMS SYM調整	接続 Fig. 5-17	TP.7/TP.8 100Hz/300mV	RV706(L/R)	TP.11/TP.12 出力波形が200Hzの正弦波になるよう調整	Figs. 5-15, 5-16 参照
2．基準レベル調整	同上	TP.7/TP.8 400Hz/300mV	RV705(L/R)	TP.9/TP.10 300mV	
3．VCA SYM調整	接続 Fig. 5-18	U703L-3/U703R-3 階段波	RV704(L/R)	TP.9/TP.10 モニタ波形がほぼ一直線(5mV以下)になるよう調整	
4．周波数特性チェック	接続 Fig. 5.17	TP.7/TP.8 100Hz/300mV	チェック	TP.9/TP.10 290mV～325mV	
		同上 10kHz/300mV	チェック	同上 194mV～217mV	
5．エンコード効果チェック	同上	同上 400Hz/300μV	チェック	同上 8.96mV～10.1mV	
		同上 400Hz/3.0V	チェック	同上 0.896mV～1.01V	歪率0.3%以下

5-4-2 デコーダ調整

調整項目	準備・設定	入力信号	調整個所	測定個所・調整値	備考
6．RMS SYM調整	接続 Fig. 5-19	TP.1/TP.2 100Hz/300mV	RV703(L/R)	TP.5/TP.6 出力波形が200Hzの正弦波になるよう調整	Figs.5-15, 5-16 参照
7．基準レベル調整	同上	TP.1/TP.2 400Hz/300mV	RV702(L/R)	TP.3/TP.4 300mV	
8．VCA SYM調整	接続 Fig. 5-20	U701L-2/U701R-2 階段波	RV701(L/R)	TP.3/TP.4 モニタ波形がほぼ一直線(5mV以下)になるよう調整	
9．周波数特性チェック	接続 Fig. 5-19	TP.1/TP.2 100Hz/300mV	チェック	TP.3/TP.4 261mV～329mV	
		同上 10kHz/300mV	チェック	同上 504mV～634mV	
10．デコード効果チェック	同上	同上 400Hz/9.49mV	チェック	同上 267μV～ 337μV	
		同上 400Hz/0.949V	チェック	同上 2.67V～3.37V	

6 EXPLODED VIEWS AND PARTS LIST

分解図とパーツ・リスト

EXPLODED VIEW-1

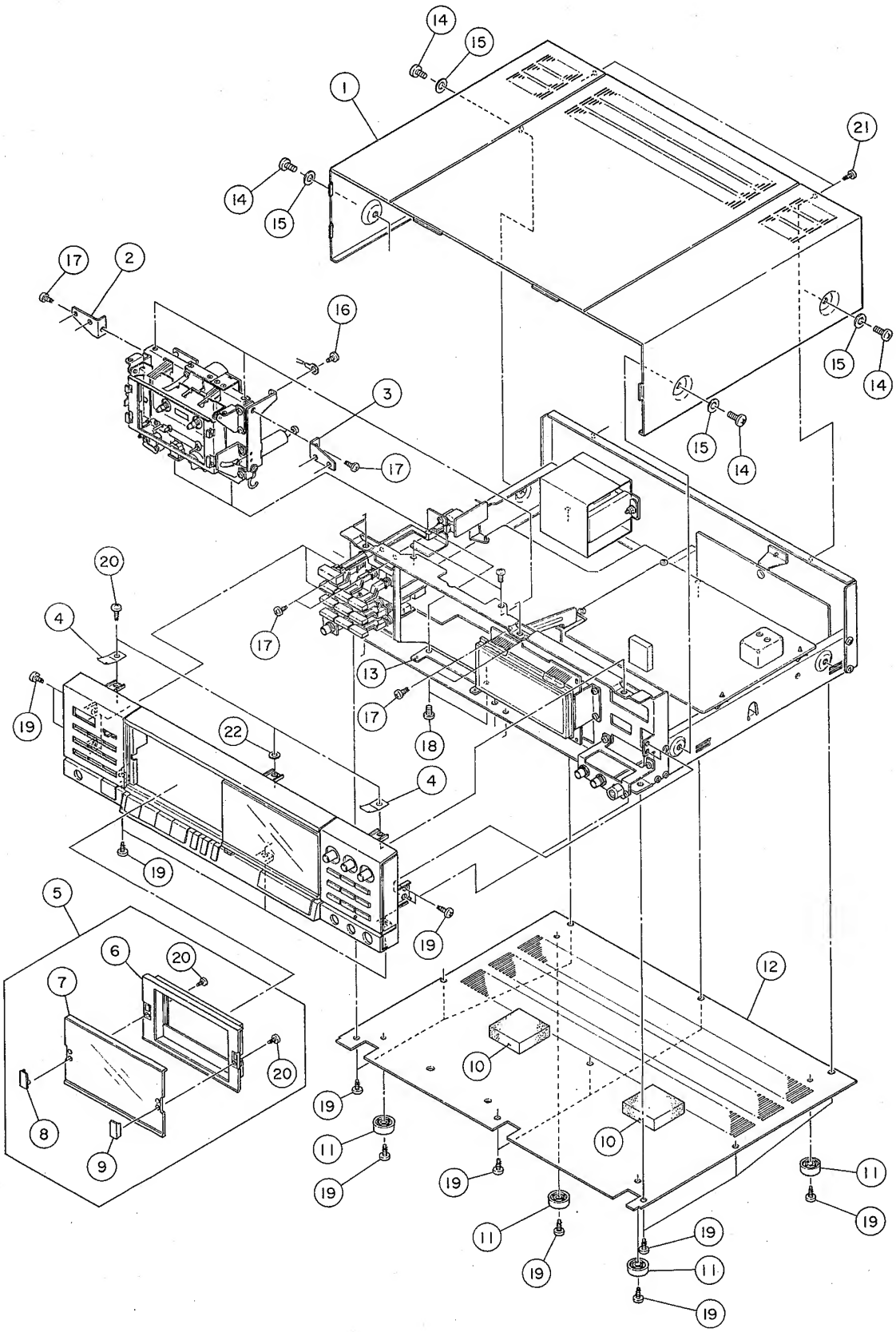

REF. NO.	PARTS NO.	DESCRIPTION	REMARKS
1 - 1	*5760549700	Cover, Top (V-900X, V-800X)	
	5760549600	Cover, Top (V-700)	
1 - 2	*5760551000	Bracket, Mechanism; L	
1 - 3	*5760551100	Bracket, Mechanism; R	
1 - 4	*5760552300	Plate, Contact	
1 - 5	5760573500	Cover Assy, Cassette (V-900X)	
	5760566900	Cover Assy, Cassette (V-800X)	
	5760575200	Cover Assy, Cassette (V-700)	
1 - 6	5760546800	Frame, Cassette	
1 - 7	5760546700	Window, Cassette; B (V-900X, V-800X)	
	5760546600	Window, Cassette; A (V-700)	
1 - 8	5760546200	Crip, Window; L	
1 - 9	5760546300	Crip, Window; R	
1 -10	*5760556600	Cushion, PCB	
1 -11	*5760551300	Foot	
1 -12	*5760550600	Cover, Bottom	
1 -13	5760576100	Spacer, Mechanism Chassis	
1 -14	5780025010	Screw, Binding Head; M5 x 10 (BLK) (V-900X, V-800X)	
	5780015010	Screw, Binding Head; M5 x 10 (Ni) (V-700)	
1 -15	5760577800	Washer, Flat (V-900X, V-800X)	
	5785015000	Washer, Flat; ϕ5.5 x ϕ12 x 0.8t (V-700)	
1 -16	5780102606	Screw, Pan Head; M2.6 x 6	
1 -17	5783003006	Screw, Pan Head Taptite; M3 x 6	
1 -18	5783003008	Screw, Pan Head Taptite; M3 x 8	
1 -19	5781123008	Screw, Binding Head Tapping; M3 x 8	
1 -20	5781062006	Screw, Pan Head Tapping; M2 x 6 (BLK)	
1 -21	5781163008	Screw, Binding Head Taping; M3 x 8 (BLK) (V-900X, V-800X)	
	5781173008	Screw, Binding Head Tapping; M3 x 8 (Ni) (V-700)	
1 -22	5785003000	Washer, Flat; ϕ3.3 x ϕ6 x 0.5t	

Parts marked with * require longer delivery time.

INCLUDED ACCESSORIES

REF. NO.	PARTS NO.	DESCRIPTION	REMARKS
	5700053600	V-900X Owner's Manual [J]	
	5700053700	V-900X Owner's Manual [All except J]	
	5700053800	V-800X Owner's Manual [J]	
	5700053900	V-800X/V-700 Owner's Manual [All except J]	
	5700054000	V-700 Owner's Manual [J]	
	5760570500	Cord Assy, In-output	

[US]: U.S.A. [C]: CANADA [GE]: GENERAL EXPORT [E]: EUROPE [UK]: U.K.
[A]: AUSTRALIA [J]: JAPAN

EXPLODED VIEW-2

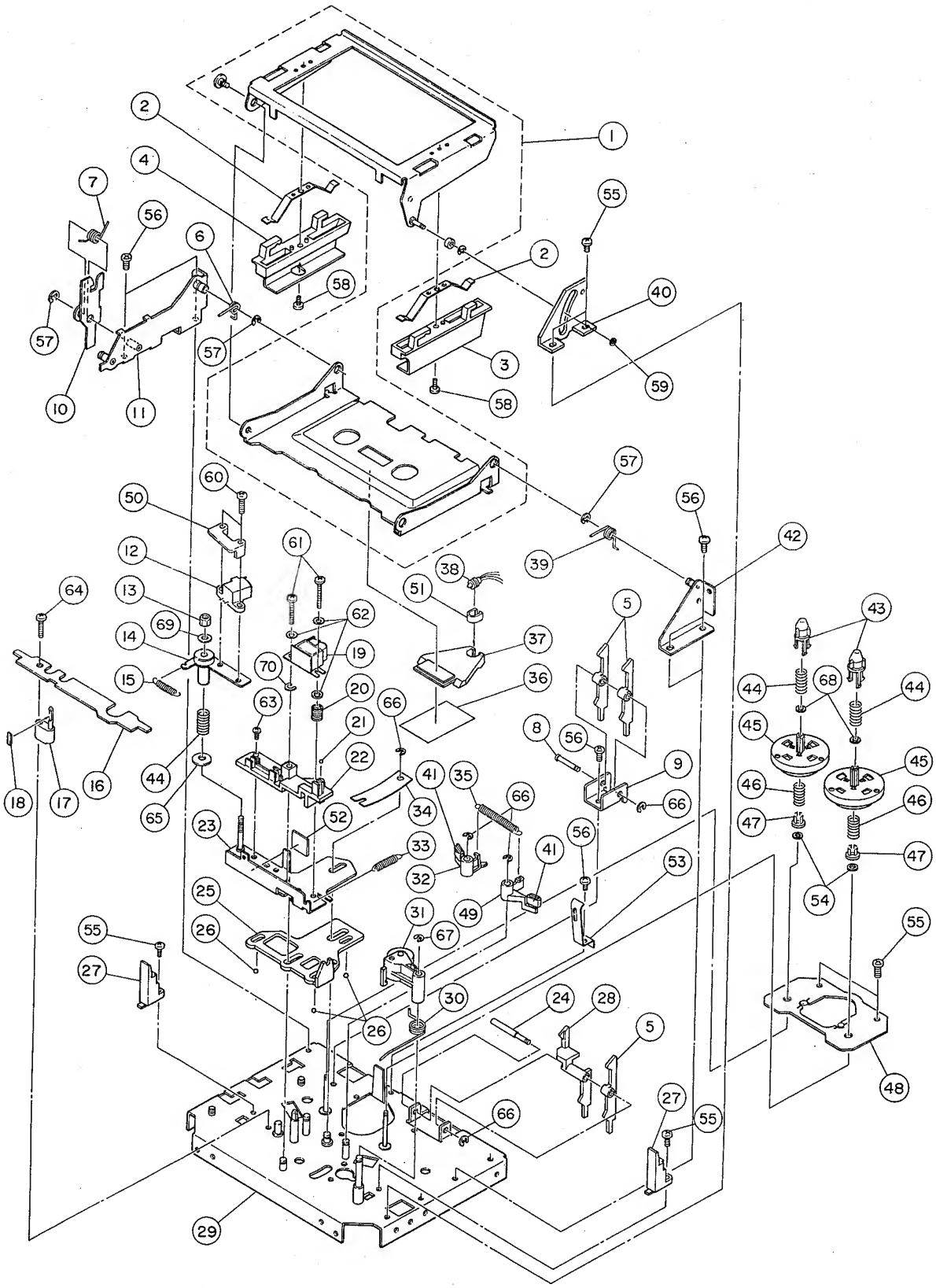

REF. NO.	PARTS NO.	DESCRIPTION	COMMON MODELS	REMARKS
2 - 1	*5800531100	Holder Assy, Cassette		
2 - 2	5800455200	Spring, Cassette Pressure		
2 - 3	5800122100	Holder, R	Z-5000	
2 - 4	5800109600	Holder, L	V-9	
2 - 5	*5800530800	Arm, Sensor; A	V-9	
2 - 6	5800115500	Spring, Holder; L		
2 - 7	5800448200	Spring, Lock	V-9	
2 - 8	*5800529600	Shaft, Arm; L	Z-5000	
2 - 9	*5800530700	Bracket, Sensor Arm		
2 -10	*5800530500	Arm, Lock; B		
2 -11	*5800441400	Bracket Assy, Holder; L		
2 -12	5569613000	Head, Erase	Z-5000	
2 -13	*5781953000	Nut, M3	C-3	
2 -14	*5800234601	Bracket Assy, Erase Head		
2 -15	5800519001	Spring, Erase Head	V-1RX Z-5000	
2 -16	*5800237801	Cover, Head; B		
2 -17	5800235100	Holder, Pad	V-1RX	
2 -18	5800235201	Pad, Head	V-80	
2 -19	5378902700	Head, R/P (V-900X)	V-80	
	5378901300	Head, R/P (V-800X, V-700)	V-1RX	
2 -20	5800114700	Spring, Head		
2 -21	5540055000	Ball, Steel; $\phi 2$	V-9	
2 -22	*5800238302	Holder, Head; B	A-450	
2 -23	*5800442400	Plate Sub-assy, Head Base	V-70C	
2 -24	*5800529700	Shaft, Sensor Arm; R	Z-5000	
2 -25	*5800122802	Plate, Slider		
2 -26	5540056000	Ball, Steel; $\phi 3$	V-9	
2 -27	*5800117400	Guide, Cassette	A-450	
2 -28	*5800530900	Arm, Sensor; B	V-9	
2 -29	*5800531000	Chassis Assy, Mechanism		
2 -30	5800461802	Spring, Pinch Roller Arm (V-900X)		
	5800556501	Spring, Pinch Roller Arm; B (V-800X, V-700)	Z-5000	
2 -31	5800239002	Arm Assy, Pinch Roller; B		
2 -32	*5800439601	Arm, Brake; L	V-1RX	
2 -33	5800455100	Spring, Base Arm	Z-5000	
2 -34	*5800235700	Spring, Head Base Pressure; B	Z-5000	
2 -35	5800445800	Spring, Brake	V-1RX	
2 -36	*5800452700	Paper, Reflector	Z-5000	
2 -37	*5800441801	Lens, Cassette	Z-5000	
2 -38	5310006500	Lamp, DC12V	Z-5000	
2 -39	5800115600	Spring, Holder; R		
2 -40	*5800442201	Bracket, Holder Guide; B	V-9	
2 -41	*5800439800	Shoe, Brake	Z-5000	
2 -42	*5800441300	Bracket Assy, Holder; R	Z-5000	
2 -43	5800236501	Ring, Drive	Z-5000	
2 -44	5800231300	Spring, Reel	V-70C	
2 -45	5800530200	Table Assy, Reel	V-70C	
2 -46	5800481901	Spring, Back Tension		
2 -47	5800231500	Holder, Spring	Z-5000	
2 -48	*5200107700	PCB Assy, SENSOR	V-70C	
	5228008300	Photo Transistor, PH-102K	Z-5000	
2 -49	*5800439701	Arm, Brake; R		
2 -50	*5800468400	Cover, Erase Head	Z-5000	
2 -51	*5800423302	Filter	Z-5000	
2 -52	*5800520000	Stopper, Erase Head; B	Z-6000	
2 -53	*5800115002	Spring, Cassette Pressure	Z-5000	
2 -54	5800539800	Washer, Teflon; $\phi 1.7 \times \phi 4 \times t0.3$	V-9	
2 -55	5783032605	Screw, Binding Head Taptite; M2.6 x 5		
2 -56	5783002605	Screw, Pan Head Taptite; M2.6 x 5		
2 -57	5786003000	E-Ring, E-3		
2 -58	5780022004	Screw, Binding Head; M2 x 4 (BLK Ni)		
2 -59	5785331500	Washer, Poly.; $\phi 1.5 \times \phi 4 \times 0.5t$ (Cut)		
2 -60	5780002014	Screw, Binding Head; M2 x 14		
2 -61	5780002016	Screw, Binding Head; M2 x 16		
2 -62	5785012000	Washer, Flat; $\phi 2$		
2 -63	5780002005	Screw, Binding Head; M2 x 5		
2 -64	5780122614	Screw, Pan Head Taptite; M2.6 x 14 (BLK Ni)		

(Continued on page 33)

Parts marked with * require longer delivery time.

EXPLODED VIEW-3 (V-900X)

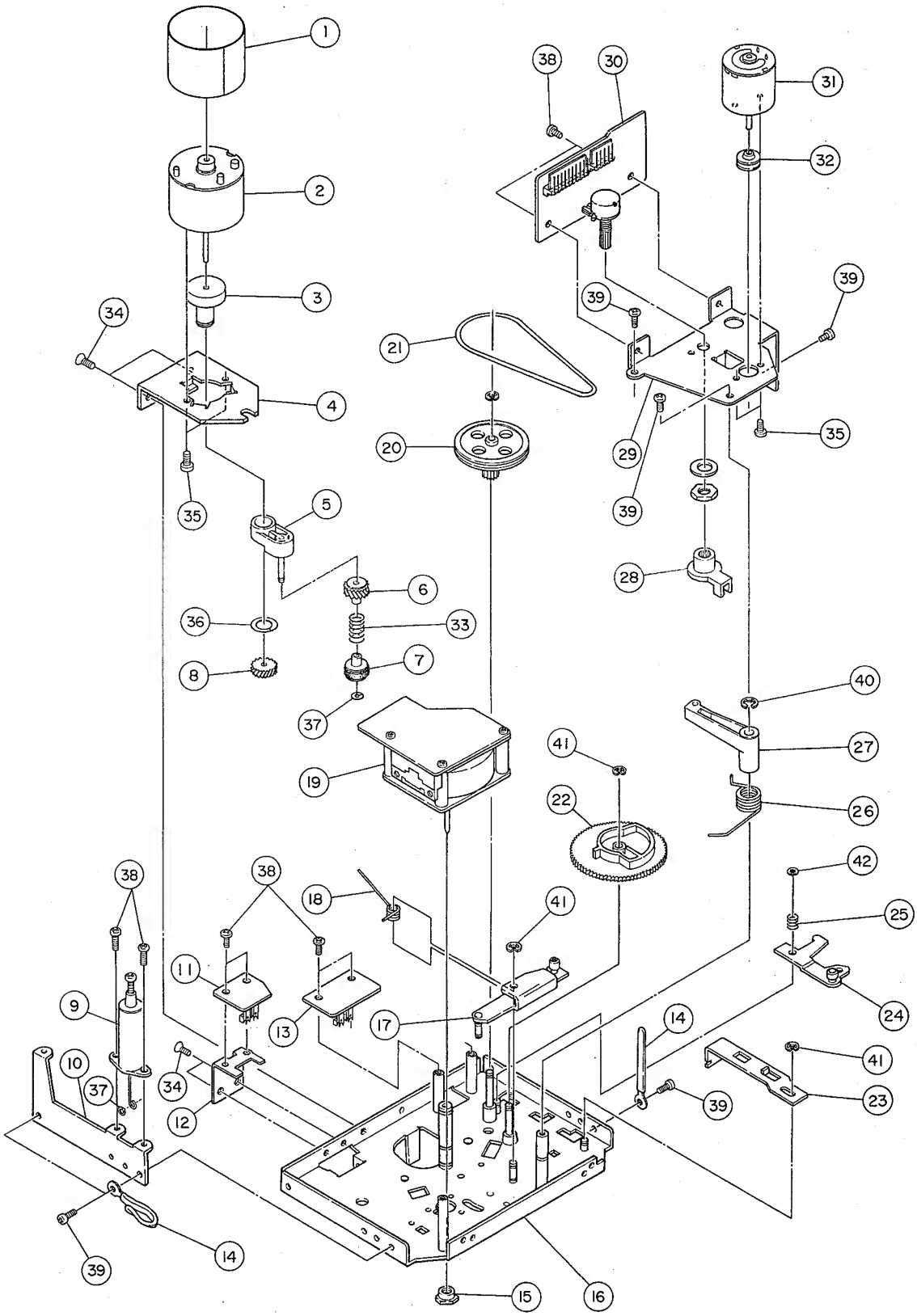

REF. NO.	PARTS NO.	DESCRIPTION	COMMON MODELS	REMARKS
3 - 1	*5800235900	Plate, Shield	V-1RX	
3 - 2	5370002502	Motor, Reel; DC	V-70C	
3 - 3	5800461700	Shaft, Pulley Arm	Z-5000	
3 - 4	*5800430001	Plate, Reel Motor	V-66C	
3 - 5	5800461500	Arm Assy, Pulley	V-70C	
3 - 6	5800461600	Pulley Assy, Gear; B	V-70C	
3 - 7	5800430302	Pulley Assy	V-70C	
3 - 8	5800232500	Pulley, Gear; A	V-70C	
3 - 9	5800131802	Damper Assy	V-9	
3 -10	*5800441001	Bracket, Damper	Z-5000	
3 -11	*5200132500	PCB Assy, SWITCH; R		
3 -12	*5800530600	Bracket, PCB		
3 -13	*5200132400	PCB Assy, SWITCH; L		
3 -14	*5581038000	Clamper, Cord; A		
3 -15	*5800239200	Nut, Motor	V-1RX	
3 -16	*5800531000	Chassis Assy, Mechanism		
3 -17	*5800532800	Arm Assy, Head Base		
3 -18	*5800530101	Spring, Base Return; B		
3 -19	5370002303	Motor Assy, Capstan; DC	V-1RX	
3 -20	5800117200	Pulley, Speed Reduction	V-9	
3 -21	5800419200	Belt, Pulley	Z-6000	
3 -22	5800428901	Cam, Control	Z-6000	
3 -23	*5800440901	Lever, Eject	Z-5000	
3 -24	*5800439901	Arm Assy, Eject	Z-5000	
3 -25	5800446000	Spring, Eject Arm	Z-5000	
3 -26	5800453700	Spring, Balance Arm	Z-5000	
3 -27	*5800418900	Arm Assy, Balance	Z-6000	
3 -28	*5800418800	Joint	Z-6000	
3 -29	*5800531400	Bracket, Motor; B		
3 -30	*5200132600	PCB Assy, MECHANISM		
3 -31	5370001400	Motor, Control; DC	V-9	
3 -32	5800123300	Pulley, V	V-9	
3 -33	5800430200	Spring, Pulley	V-70C	
3 -34	5783042605	Screw, Flat Countersunk Head Taptite; M2.6 x 5		
3 -35	5780002603	Screw, Binding Head; M2.6 x 3		
3 -36	5785336000	Washer, Poly.; ϕ6 x ϕ10 x 0.5t (Cut)		
3 -37	5785331500	Washer, Poly.; ϕ1.5 x ϕ4 x 0.5t (Cut)		
3 -38	5783032605	Screw, Binding Head Taptite; M2.6 x 5		
3 -39	5783002605	Screw, Pan Head Taptite; M2.6 x 5		
3 -40	5786004000	E-Ring, E-4		
3 -41	5786002000	E-Ring, E-2		
3 -42	5781882400	Nut, Push; M2.4		

Parts marked with * require longer delivery time.

(Continued from page 31)

REF. NO.	PARTS NO.	DESCRIPTION	COMMON MODELS	REMARKS
2 -65	5785003000	Washer, Flat; ϕ3 x ϕ8 x 0.5t		
2 -66	5786002000	E-Ring, E-2		
2 -67	5786002500	E-Ring, E-2.5		
2 -68	5785331100	Washer, Poly.; ϕ1.2 x ϕ3.6 x 0.5t (Cut)		
2 -69	5785313000	Washer, Poly.; ϕ3 x ϕ6 x 0.5t		
2 -70	*5800468900	Spacer, Head		

Parts marked with * require longer delivery time.

EXPLODED VIEW-4 (V-800X/V-700)

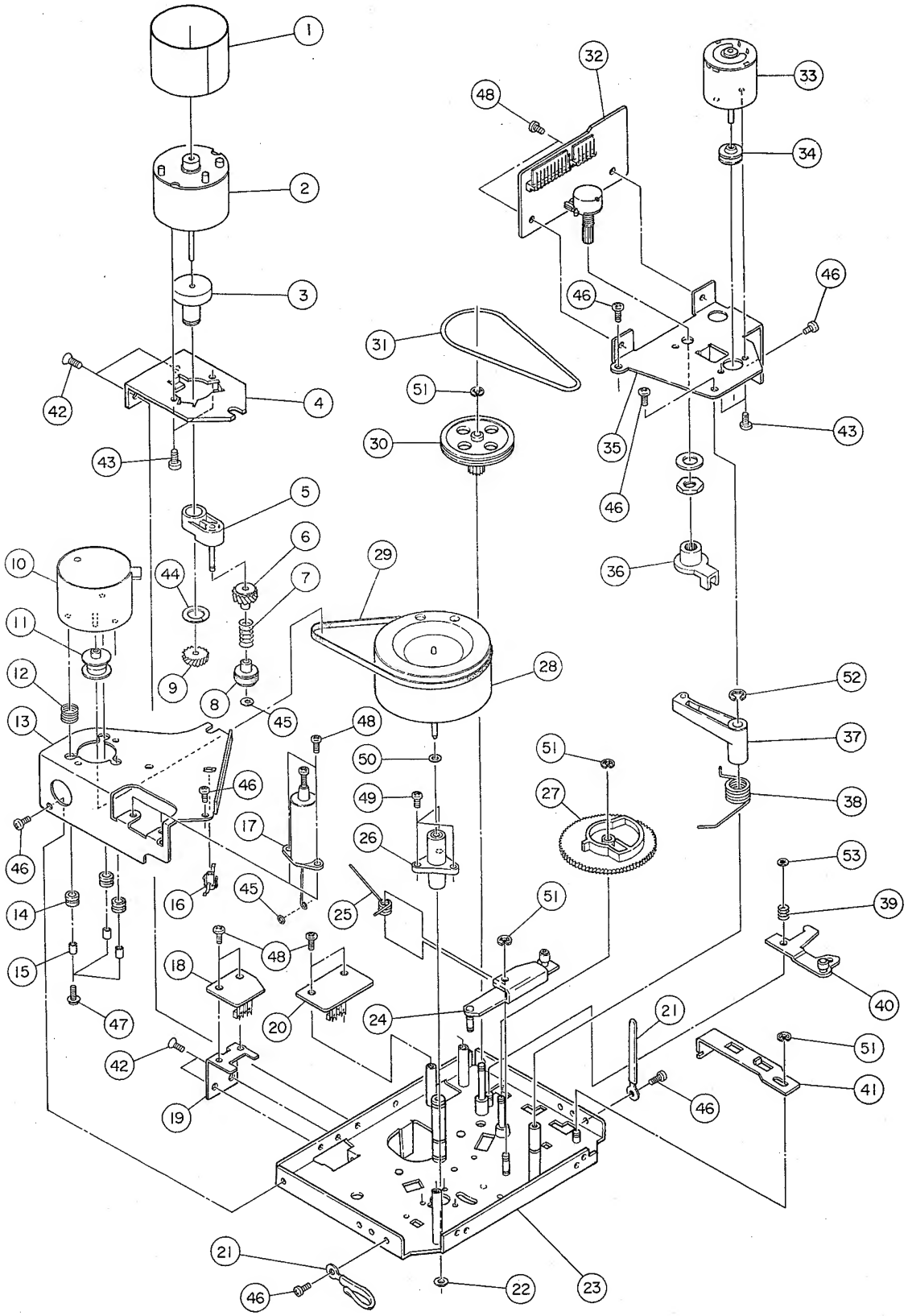

REF. NO.	PARTS NO.	DESCRIPTION	COMMON MODELS	REMARKS
4 - 1	*5800235900	Plate, Shield	V-1RX	
4 - 2	5370002502	Motor, Reel; DC	V-70C	
4 - 3	5800461700	Shaft, Pulley Arm	Z-5000	
4 - 4	*5800430001	Plate, Reel Motor	V-66C	
4 - 5	5800461500	Arm Assy, Pulley	V-70C	
4 - 6	5800461600	Pulley Assy, Gear; B	V-70C	
4 - 7	5800430200	Spring, Pulley	V-70C	
4 - 8	5800430302	Pulley Assy	V-70C	
4 - 9	5800232500	Pulley, Gear; A	V-70C	
4 -10	5370004200	Motor, Capstan; DC		
4 -11	5800232200	Pulley, Motor	V-70C	
4 -12	5800469800	Spring, Motor Earth	V-909RX	
4 -13	*5800531500	Bracket, Capstan Flywheel		
4 -14	*5534537000	Cushion, Rubber	A-206	
4 -15	*5785602650	Spacer, Cushion; ϕ2.6 x t5		
4 -16	*5800236900	Bearing, Thrust	V-70C	
4 -17	5800131802	Damper Assy	V-9	
4 -18	*5200132500	PCB Assy, SWITCH; R		
4 -19	*5800530600	Bracket, PCB		
4 -20	*5200132400	PCB Assy, SWITCH; L		
4 -21	*5581038000	Clamper, Cord; A		
4 -22	5534130000	Cap, Oil Retainer	A-400	
4 -23	*5800531000	Chassis Assy, Mechanism		
4 -24	*5800532800	Arm Assy, Head Base		
4 -25	5800530101	Spring, Base Return; B		
4 -26	5800238800	Housing Assy, Capstan Flywheel	V-70C	
4 -27	5800428901	Cam, Control		
4 -28	5800556600	Flywheel Assy, Capstan		
4 -29	5800106900	Belt, Capstan Drive	V-9	
4 -30	5800117200	Pulley, Speed Reduction	V-9	
4 -31	5800419200	Belt, Pulley	Z-6000	
4 -32	*5200132600	PCB Assy, Mechanism		
4 -33	5370001400	Motor, Control	V-9	
4 -34	5800123300	Pulley, Motor	V-9	
4 -35	*5800531400	Bracket, Motor; B		
4 -36	*5800418800	Joint	Z-6000	
4 -37	*5800418900	Arm Assy, Balance	Z-6000	
4 -38	5800453700	Spring, Balance Arm	Z-5000	
4 -39	5800446000	Spring, Eject Arm	Z-5000	
4 -40	*5800439901	Arm Assy, Eject	Z-5000	
4 -41	*5800440901	Lever, Eject	Z-5000	
4 -42	5783042605	Screw, Flat Countersunk Heat Taptite; M2.6 x 5		
4 -43	5780002603	Screw, Binding Head; M2.6 x 3		
4 -44	5785336000	Washer, Poly.; ϕ6 x ϕ10 x 0.5t (Cut)		
4 -45	5785331500	Washer, Poly.; ϕ1.5 x ϕ4 x 0.5t (Cut)		
4 -46	5783002605	Screw, Pan Head Taptite; M2.6 x 5		
4 -47	5780142608	Screw, Pan Head SEMS; M2.6 x 8 (B-type)		
4 -48	5783032605	Screw, Binding Head Taptite; M2.6 x 5		
4 -49	5783002606	Screw, Pan Head Taptite; M2.6 x 6		
4 -50	5785302200	Washer, Poly.; ϕ2.6 x ϕ5 x 0.25t		
4 -51	5786002000	E-Ring, E-2		
4 -52	5786004000	E-Ring, E-4		
4 -53	5781882400	Nut, Push; M2.4		

Parts marked with * require longer delivery time.

EXPLODED VIEW-5

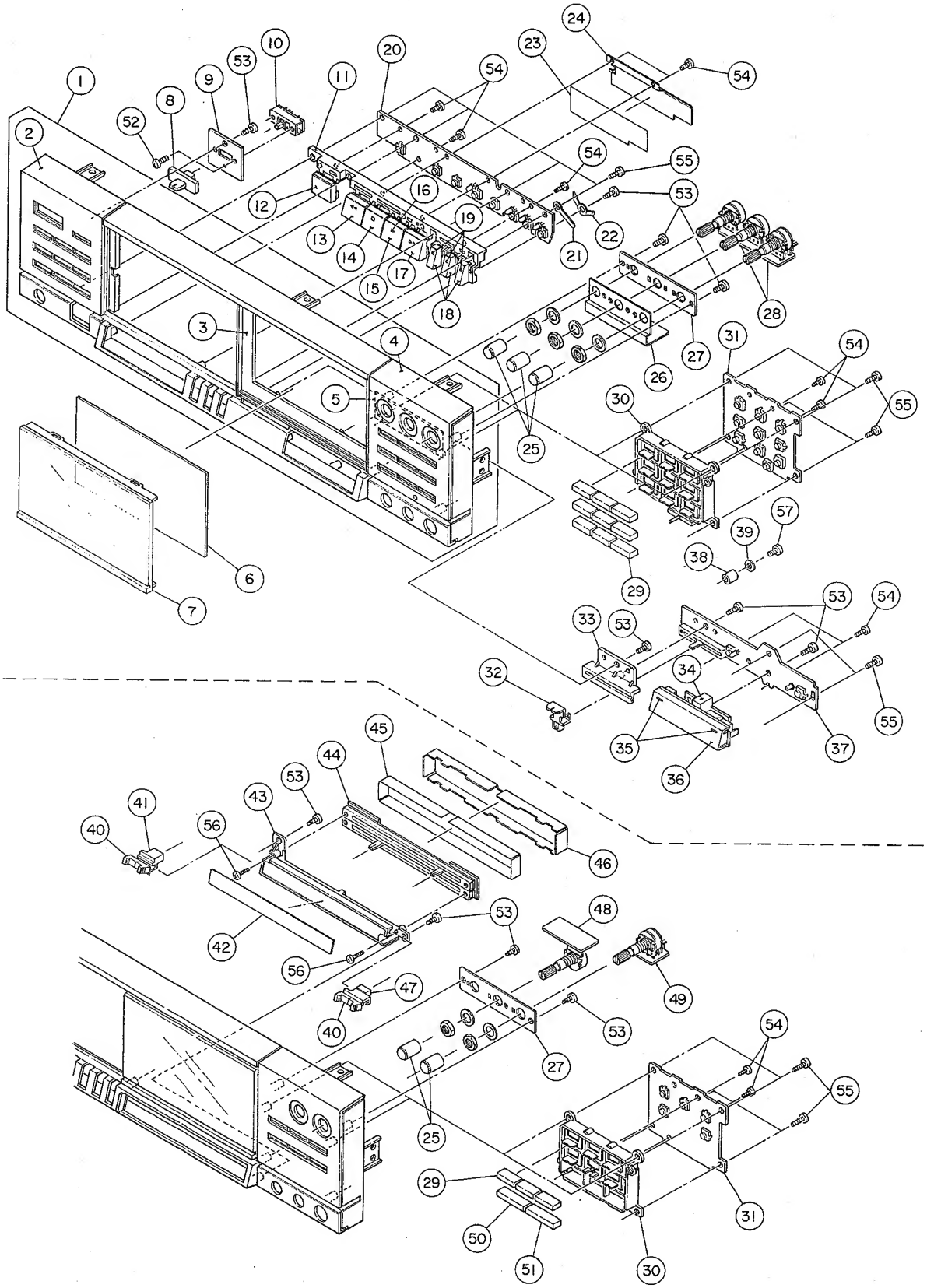

REF. NO.	PARTS NO.	DESCRIPTION		REMARKS
5 - 1	*5760577500	Panel Assy, Front	(V-900X)	
	*5760577600	Panel Assy, Front	(V-800X)	
	*5760577700	Panel Assy, Front	(V-700)	
5 - 2	*5760548000	Escutcheon, CL	(V-900X)	
	*5760549900	Escutcheon, BL	(V-800X)	
	*5760549800	Escutcheon, AL	(V-700)	
5 - 3	*5760550000	Flame, Front; C	(V-900X)	
	*5760549900	Flame, Front; B	(V-800X)	
	*5760549800	Frame, Front; A	(V-700)	
5 - 4	*5760548300	Escutcheon, CR	(V-900X)	
	*5760548200	Escutcheon, BR	(V-800X)	
	*5760548100	Escutcheon, AR	(V-700)	
5 - 5	*5760550300	Scale, VR C	(V-900X)	
	*5760550200	Scale, VR B	(V-800X)	
	*5760550100	Scale, VR A	(V-700)	
5 - 6	*5760547700	Filter, FL B	(V-900X)	
	*5760547600	Filter, FL A	(V-800X, V-700)	
5 - 7	5760547500	Window, FL C	(V-900X)	
	5760547400	Window, FL B	(V-800X)	
	5760547300	Window, FL A	(V-700)	
5 - 8	5760543100	Knob, Timer	(V-900X, V-800X)	
5 - 9	*5760543200	Bracket, Timer	(V-900X, V-800X)	
5 -10	5760567100	Switch, Slide	(V-900X, V-800X)	
5 -11	*5760549300	Frame, Button AB	(V-900X, V-800X)	
	*5760549200	Frame, Button AA	(V-700)	
5 -12	5760543600	Button, EJECT B	(V-900X, V-800X)	
	5760543500	Button, EJECT C	(V-700)	
5 -13	5760543800	Button, REWIND B	(V-900X, V-800X)	
	5760543700	Button, REWIND A	(V-700)	
5 -14	5760544000	Button, STOP B	(V-900X, V-800X)	
	5760543900	Button, STOP A	(V-700)	
5 -15	5760544200	Button, PLAY B	(V-900X, V-800X)	
	5760544100	Button, PLAY A	(V-700)	
5 -16	5760544300	Lens, Insert A		
5 -17	5760544500	Button, FF B	(V-900X, V-800X)	
	5760544400	Button, FF A	(V-700)	
5 -18	5760544700	Button, REC B	(V-900X, V-800X)	
	5760544600	Button, REC A	(V-700)	
5 -19	5760544800	Lens, Insert B		
5 -20	*5760567500	PCB Assy, KEY SW 1		
5 -21	*5760578000	Clamper		
5 -22	*5760552200	Contact Plate, TR NSP		
5 -23	*5760569200	Barrier, TR SP SW		
5 -24	*5760569100	Shield, TR NSP SW		
5 -25	5760546100	Knob, VR B	(V-900X, V-800X)	
	5760546000	Knob, VR A	(V-700)	
5 -26	*5760573600	Shield, REC LEV.	(V-900X)	
5 -27	*5760548400	Bracket, VR		
5 -28	*5760567200	PCB Assy, VR 1	(V-900X)	
	*5760567310	PCB Assy, VR 2	(V-900X)	
5 -29	5760545200	Button, MB	(V-900X, V-800X)	
	5760545100	Button, MA	(V-700)	
5 -30	*5760549500	Frame, Button C		
5 -31	*5760567410	PCB Assy, KEY SW 2	(V-900X)	
	*5760567400	PCB Assy, KEY SW 2	(V-800X, V-700)	
5 -32	5760545700	Knob, Fade Time	(V-900X)	
5 -33	*5760548500	Guide, VR S	(V-900X)	
5 -34	*5760549400	Frame, Button B	(V-900X)	
5 -35	5760545000	Lens, Insert C	(V-900X)	
5 -36	5760544900	Button, FADE	(V-900X)	
5 -37	*5760573700	PCB Assy, VR 4	(V-900X)	
5 -38	*5760573800	Spacer	(V-900X)	
5 -39	*5760566800	Washer	(V-900X)	

(Continued on page 40)

Parts marked with * require longer delivery time.

EXPLODED VIEW-6

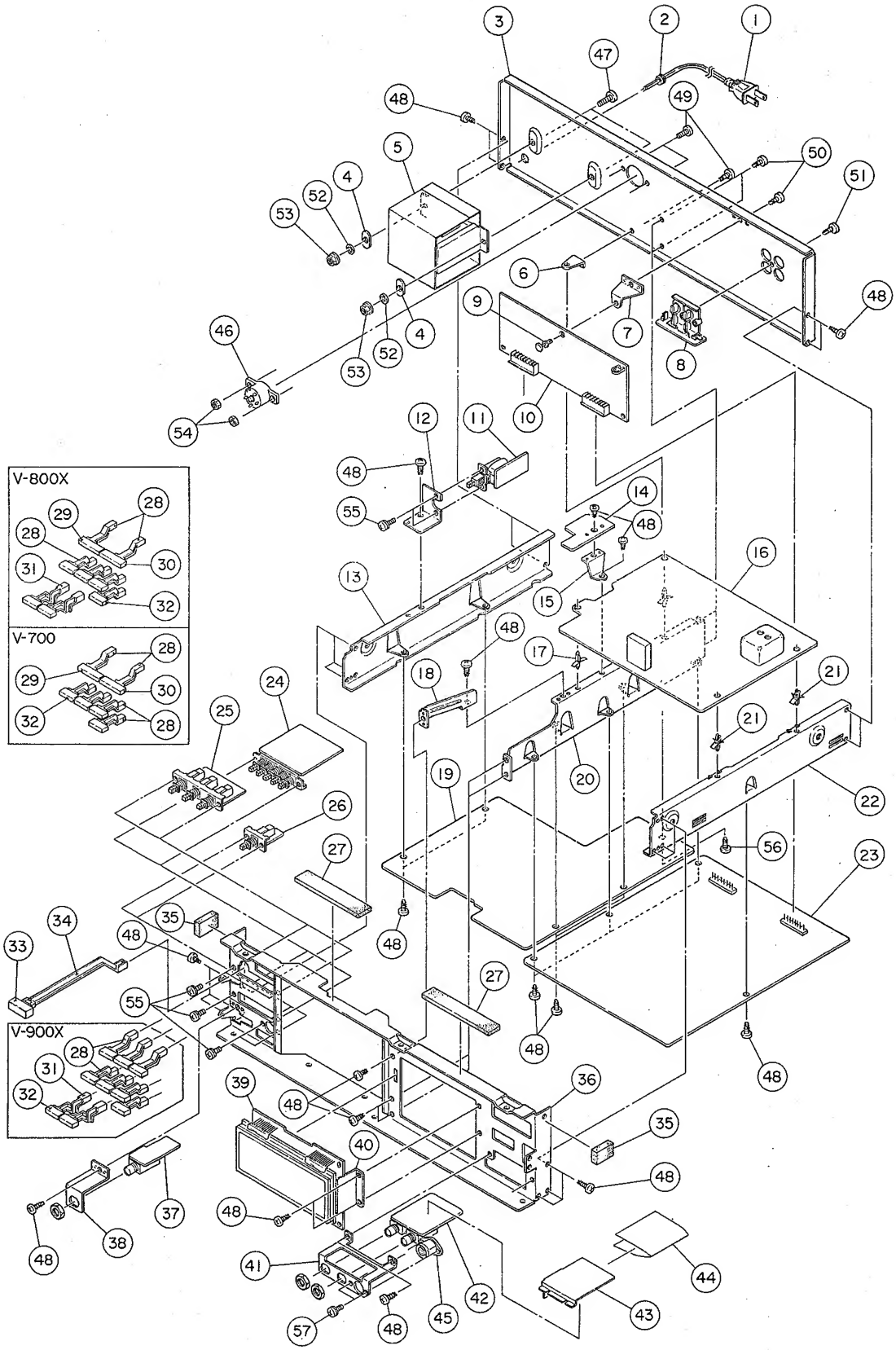

REF. NO.	PARTS NO.	DESCRIPTION	REMARKS
6 - 1	⚠*5760555600	Cord Assy, AC Power [J]	
	⚠*5760555700	Cord Assy, AC Power [US, C, GE]	
	⚠*5760555800	Cord Assy, AC Power [E]	
	⚠*5760555900	Cord Assy, AC Power [UK]	
	⚠*5760556000	Cord Assy, AC Power [A]	
6 - 2	⚠*5760556100	Bushing, Cord [J, US, C, GE]	
	⚠*5760556200	Bushing, Cord [E, UK, A]	
6 - 3	*5760550700	Panel, Rear [J, US, C]	
	*5760550800	Panel, Rear [GE]	
	*5760555400	Panel, Rear [E, UK, A]	
6 - 4	*5760552100	Plate	
6 - 5	⚠ 5760555500	Transformer, Power [J]	
	⚠ 5760555510	Transformer, Power [US, C]	
	⚠ 5760555520	Transformer, Power [GE]	
	⚠ 5760555530	Transformer, Power [E, UK, A]	
6 - 6	*5760551200	Bracket, PCB	
6 - 7	*5760551400	Bracket, DBX PCB (V-900X, V-800X)	
6 - 8	*5760556400	PCB Assy, IN/OUTPUT	
6 - 9	*5786610200	Rivet, Push	
6 -10	*5760554400	PCB Assy, DBX (V-900X, V-800X)	
6 -11	*5760556500	PCB Assy, POWER SW [J, US, C]	
	*5760556510	PCB Assy, POWER SW [GE, E, UK, A]	
6 -12	*5760553100	Bracket, Power SW	
6 -13	*5760550400	Bracket, Side; L	
6 -14		PCB Assy, TR 3 (V-900X)	
		PCB Assy, TR 3 (V-800X)	
		PCB Assy, TR 3 (V-700)	
6 -15	*5760551400	Bracket, DBX PCB	
6 -16	*5760571600	PCB Assy, AUTO CAL (V-900X)	
	*5760576500	PCB Assy, TR 4 (V-900X)	
6 -17	*5760571700	Support, PCB (V-900X)	
6 -18	*5760551900	Bracket, MECH	
6 -19	*5760554320	PCB Assy, POWER/CONTROL (V-900X) [J, US, C, GE, A]	
	*5760554330	PCB Assy, POWER/CONTROL (V-900X) [E, UK]	
	*5760554300	PCB Assy, POWER/CONTROL (V-800X) [J, US, C, GE, A]	
	*5760554310	PCB Assy, POWER/CONTROL (V-800X) [E, UK]	
	*5760554340	PCB Assy, POWER/CONTROL (V-700) [J, US, C, GE, A]	
	*5760554350	PCB Assy, POWER/CONTROL (V-700) [E, UK]	
6 -20	*5760551800	Bracket, Center	
6 -21	*5760571800	Support, PCB (V-900X)	
6 -22	*5760550500	Bracket, Side; R	
6 -23	*5760554210	PCB Assy, R/P (V-900X)	
	*5760554200	PCB Assy, R/P (V-800X)	
	*5760554220	PCB Assy, R/P (V-700)	
6 -24	*5760554600	PCB Assy, NR SW (V-900X, V-800X)	
	*5760554610	PCB Assy, NR SW (V-700)	
6 -25	*5760554510	PCB Assy, MONITOR SW (V-900X)	
	*5760554500	PCB Assy, MONITOR SW (V-800X, V-700)	
6 -26	*5760554700	PCB Assy, MPX SW	
6 -27	*5760552500	Spacer, Top Cover	
6 -28	*5760549000	Joint, A	
6 -29	5760545400	Button, NB L (V-800X)	
	5760545300	Button, NA L (V-700)	
6 -30	5760545600	Button, NB R (V-800X)	
	5760545500	Button, NA R (V-700)	
6 -31	5760549100	Joint, B (V-900X, V-800X)	
6 -32	5760545200	Button, MB (V-900X, V-800X)	
	5760545100	Button, MA (V-700)	
6 -33	5760543400	Button, Power B (V-900X, V-800X)	
	5760543300	Button, Power A (V-700)	

(Continued on page 40)

Parts marked with * require longer delivery time.

[US]: U.S.A. [C]: CANADA [GE]: GENERAL EXPORT [E]: EUROPE [UD]: U.K.
[A]: AUSTRALIA [J]: JAPAN

(Continued from page 37)

EXPLODED VIEW-5

REF. NO.	PARTS NO.	DESCRIPTION		REMARKS
5 -40	5760545900	Knob, REC VR B	(V-800X)	
	5760545800	Knob, REC VR A	(V-700)	
5 -41	5760548900	Joint, VR RB	(V-800X)	
	5760548800	Joint, VR RA	(V-700)	
5 -42	*5760547000	Plate, REC VR B	(V-800X)	
	*5760546900	Plate, REC VR A	(V-700)	
5 -43	*5760547200	Guide, VR MB	(V-800X)	
	*5760547100	Guide, VR MA	(V-700)	
5 -44	*5760567600	PCB Assy, VR 3	(V-800X, V-700)	
5 -45	*5760569700	Barrier	(V-800X, V-700)	
5 -46	*5760569600	Shield, Slide VR	(V-800X, V-700)	
5 -47	5760548700	Joint, VR LB	(V-800X)	
	5760548600	Joint, VR LA	(V-700)	
5 -48	*5760567300	PCB Assy, VR 2	(V-800X, V-700)	
5 -49	*5760567200	PCB Assy, VR 1	(V-800X, V-700)	
5 -50	5760545400	Button, NB L	(V-800X)	
	5760545300	Button, NA L	(V-700)	
5 -51	5760545600	Button, NB R	(V-800X)	
	5760545500	Button, NA R	(V-700)	
5 -52	5780002003	Screw, Binding Head; M2 x 3		
5 -53	5783603008	Screw, Pan Head Tap; M3 x 8		
5 -54	5781002006	Screw, Binding Head; M2 x 6 (Ni)		
5 -55	5783602610	Screw, Pan Head Tap; M2.6 x 10		
5 -56	5780002608	Screw, Pan Head; M2.6 x 8		
5 -57	5783603012	Screw, Pan Head Tap; M3 x 12		

Parts marked with * require longer delivery time.

(Continued from page 39)

EXPLODED VIEW-6

REF. NO.	PARTS NO.	DESCRIPTION		REMARKS
6 -34	*5760552100	Shaft, L	(V-900X)	
	*5760552000	Shaft, L	(V-800X, V-700)	
6 -35	*5760567000	Spacer, Front		
6 -36	*5760550900	Panel, Front		
6 -37	*5760554900	PCB Assy, PHONES		
6 -38	*5760551500	Bracket, PHONES Jack		
6 -39	*5760554810	PCB Assy, FL	(V-900X)	
	*5760554800	PCB Assy, FL	(V-800X)	
	*5760554820	PCB Assy, FL	(V-700)	
6 -40	*5760551600	Bracket, FL		
6 -41	*5760551700	Bracket, MIC Jack		
6 -42	*5760555000	PCB Assy, MIC AMPL.		
6 -43	*5760552600	Shield, MIC J		Part of 6-42
6 -44	*5760552700	Barrier, MIC J		Part of 6-42
6 -45	5760555100	Jack, Remote	(V-900X, V-800X)	
6 -46	⚠ 5760556300	Switch, Voltag Selector	[GE]	
6 -47	5780014015	Screw, Binding Head; M4 x 15 (Ni)		
6 -48	5781123008	Screw, Binding Head Tapping; M3 x 8		
6 -49	5780013008	Screw, Binding Head; M3 x 8 (Ni)		
6 -50	5781173008	Screw, Binding Head Tapping; M3 x 8 (Ni)		
6 -51	5781003008	Screw, Binding Head Tapping; M3 x 8		
6 -52	5785104000	Washer, Lock; ϕ4		
6 -53	5781904000	Nut, Hex w/Flange; M4		
6 -54	5781823000	Nut, Hex; M3		
6 -55	5780133005	Screw, Pan Head SEMS; M3 x 5		
6 -56	5760577900	Screw, I.T. BT		
6 -57	5780132605	Screw, Pan Head SEMS; M2.6 x 5		

Parts marked with * require longer delivery time.

[US]: U.S.A. [C]: CANADA [GE]: GENERAL EXPORT [E]: EUROPE [UK]: U.K.
[A]: AUSTRALIA [J]: JAPAN

7 PC BOARDS AND PARTS LIST
基板図とパーツ・リスト

R/P AMPL PCB ASSY (V-900X)

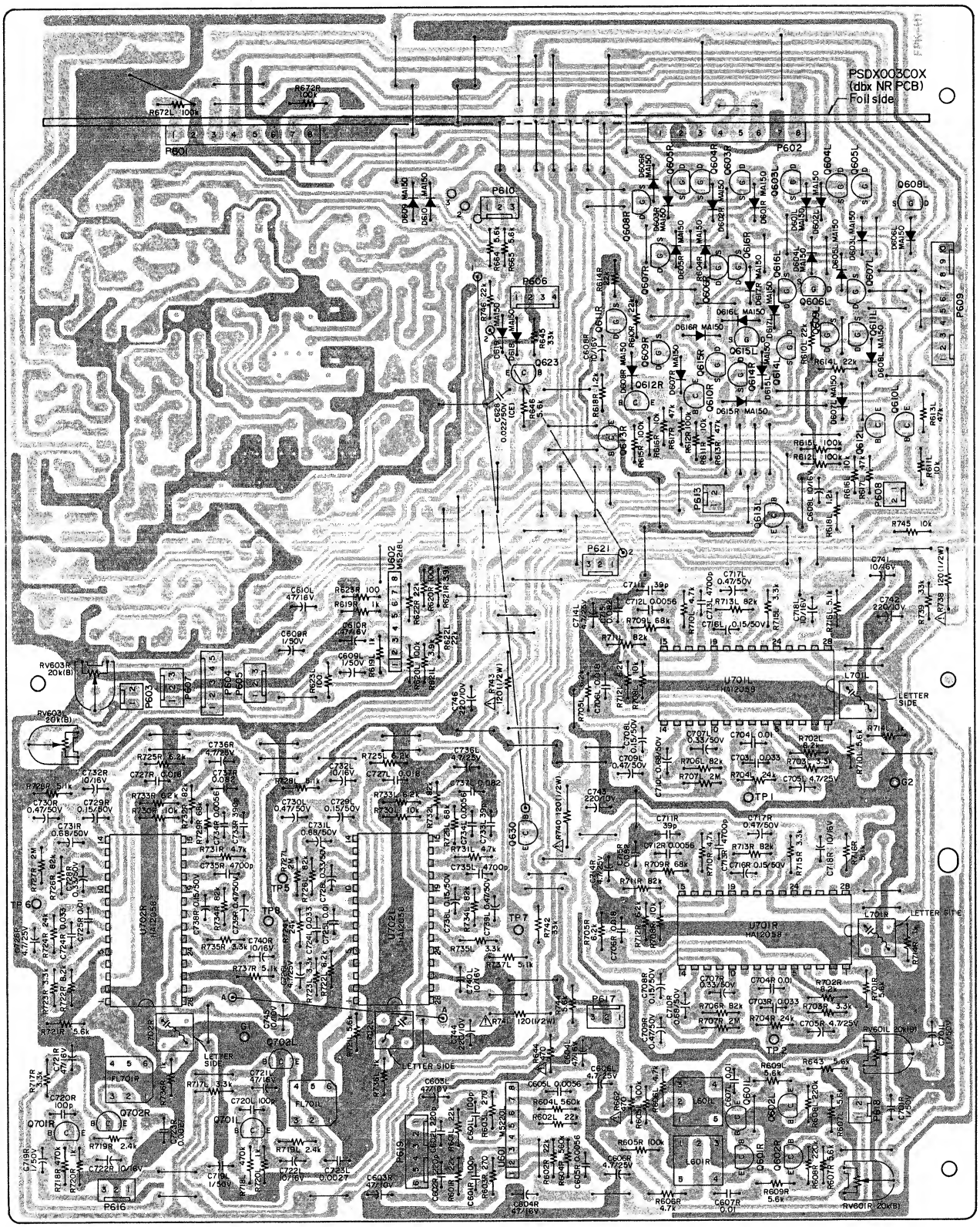

Q601L/R	2SC2878 B	Q612L/R	2SC945A P,Q	Q630	2SC945A P,Q
Q602L/R	2SC945A P	Q613L/R	2SC2878 B		
Q603L/R ∿ Q609L/R	2SK136 Q,R	Q614L/R ∿ Q616L/R	2SK136 Q,R	Q701L/R, Q702L/R	2SC945A P,Q
Q610L/R	2SC945A P	Q617L/R	2SC2878 B		
Q611L/R	2SK136 Q,R				

R/P AMPL PCB ASSY (V-800X)

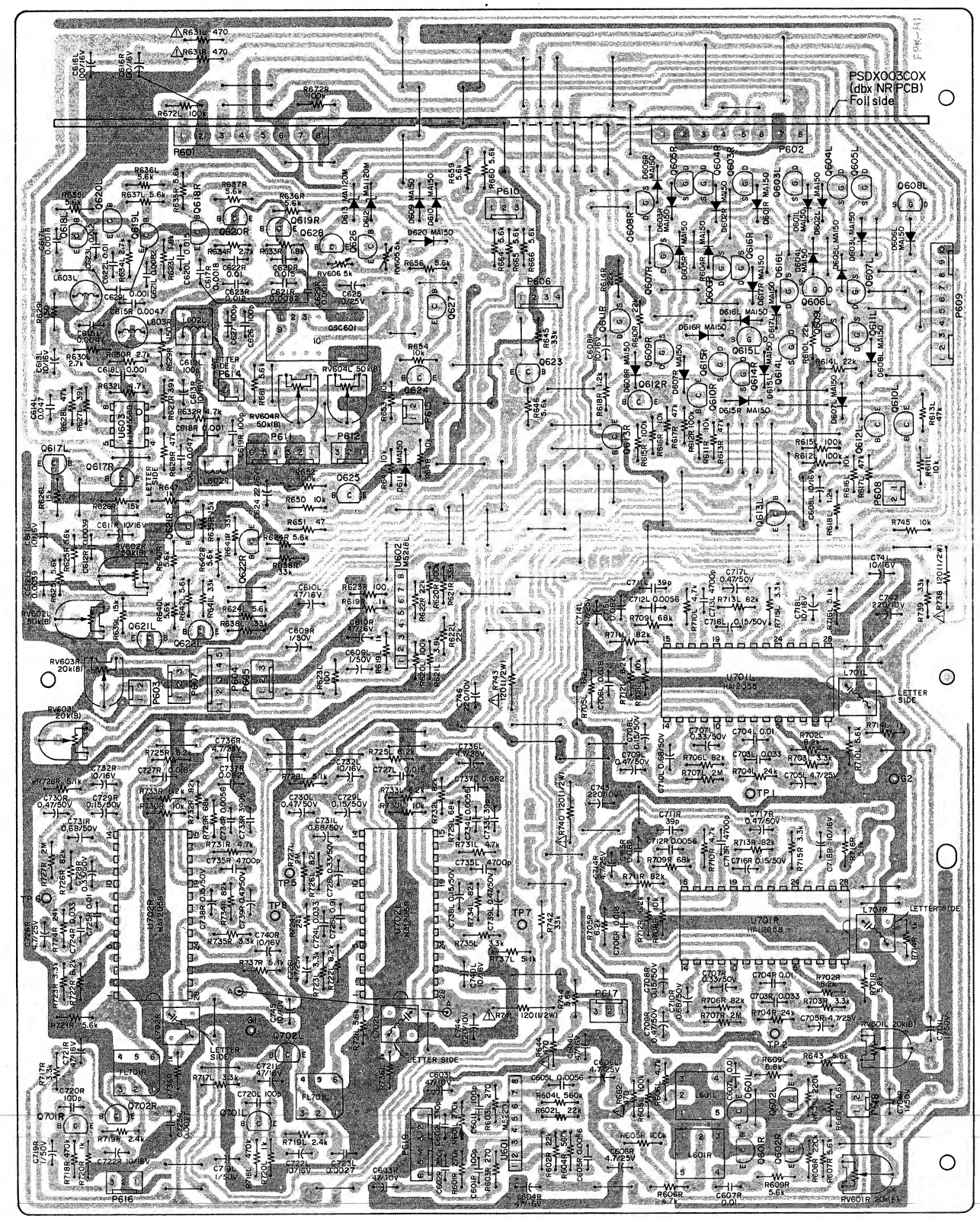

Q601L/R	2SC2878 B	Q612L/R	2SC945A P,Q	Q623,Q624	2SA733 Q
Q602L/R	2SC945A P	Q613L/R	2SC2878 B	Q625,Q626	2SC945A P,Q
Q603L/R ∿ Q609L/R	2SK136 Q,R	Q614L/R ∿ Q616L/R	2SK136 Q,R	Q627	2SC1383 Q
Q610L/R	2SC945A P	Q617L/R	2SC2878 B	Q628	2SC945A P,Q
Q611L/R	2SK136 Q,R	Q618L/R ∿ Q622L/R	2SC945A P,Q	Q701L/R, Q702L/R	2SC945A P,Q

R/P AMPL PCB ASSY (V-700)

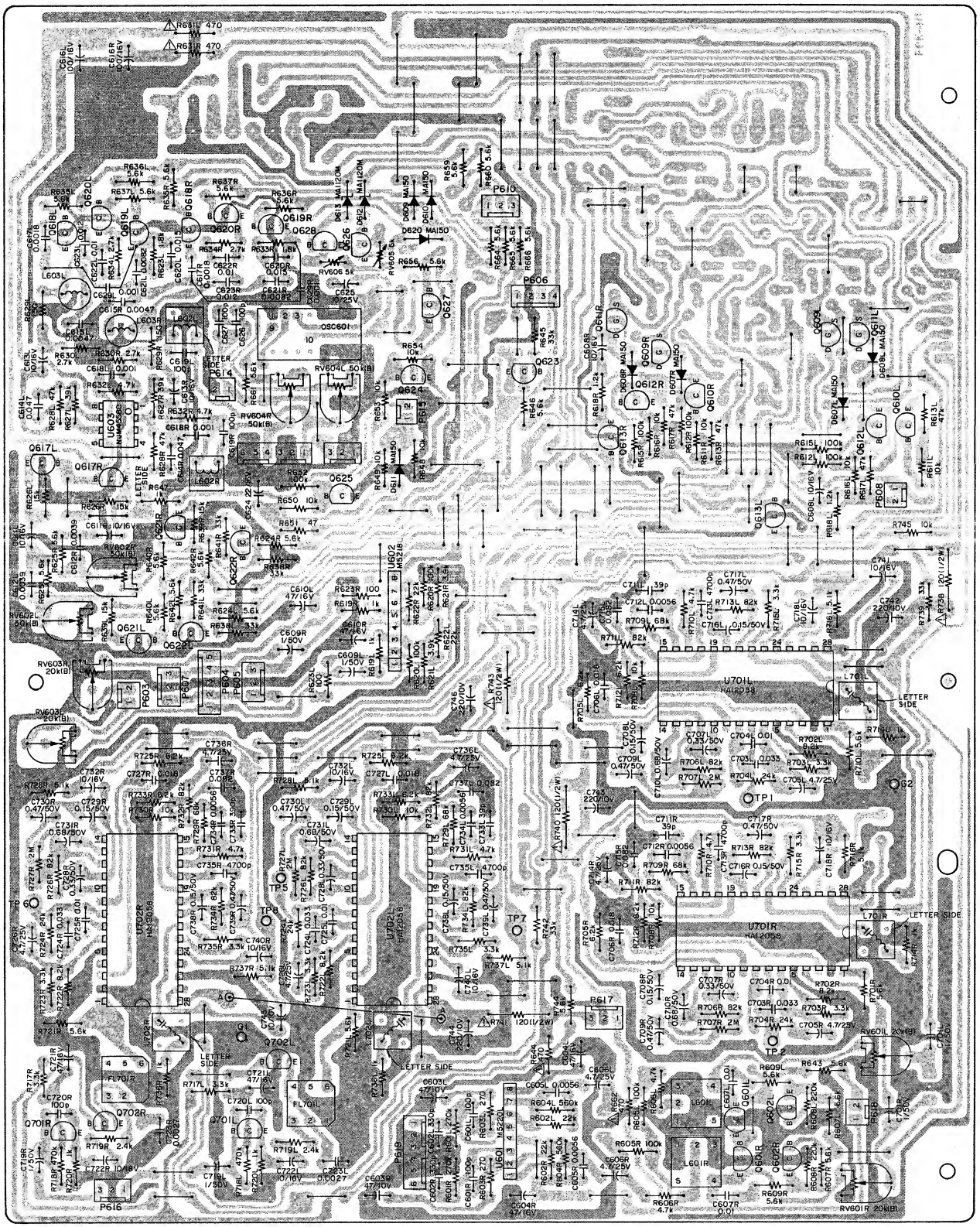

Q601L/R	2SC2878 B	Q612L/R	2SC945A P,Q	Q623,Q624	2SA733 Q
Q602L/R	2SC945A P	Q613L/R	2SC2878 B	Q625,Q626	2SC945A P,Q
Q609L/R	2SK136 Q,R			Q627	2SC1383 Q
Q610L/R	2SC945A P	Q617L/R	2SC2878 B	Q628	2SC945A P,Q
Q611L/R	2SK136 Q,R	Q618L/R~Q622L/R	2SC945A P,Q	Q701L/R,Q702L/R	2SC945A P,Q

dbx NR PCB ASSY (V-900X, V-800X)

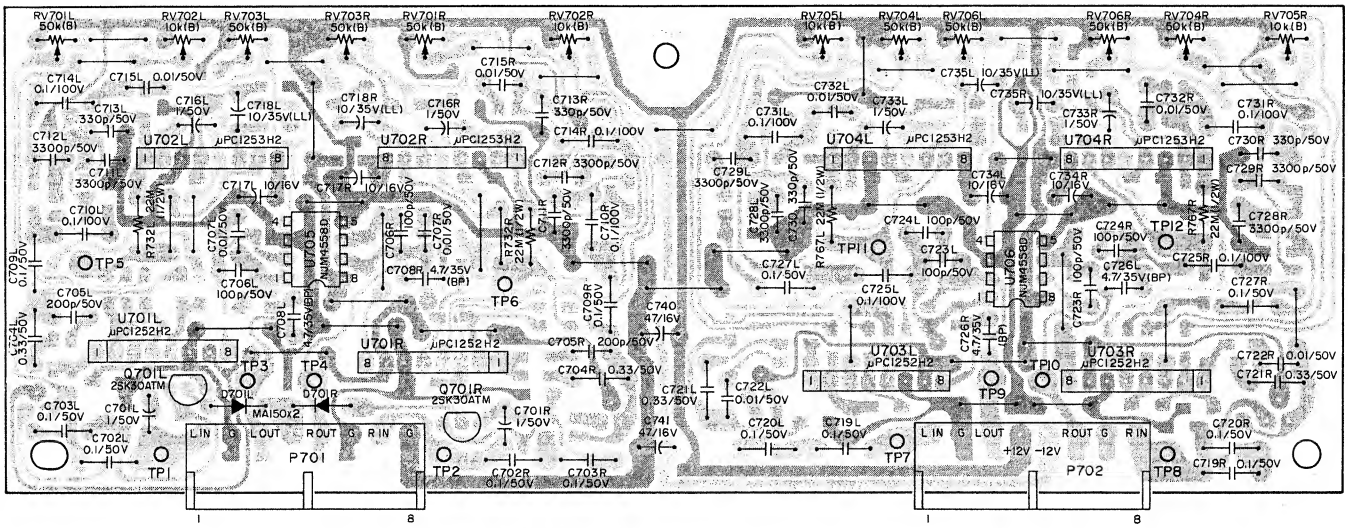

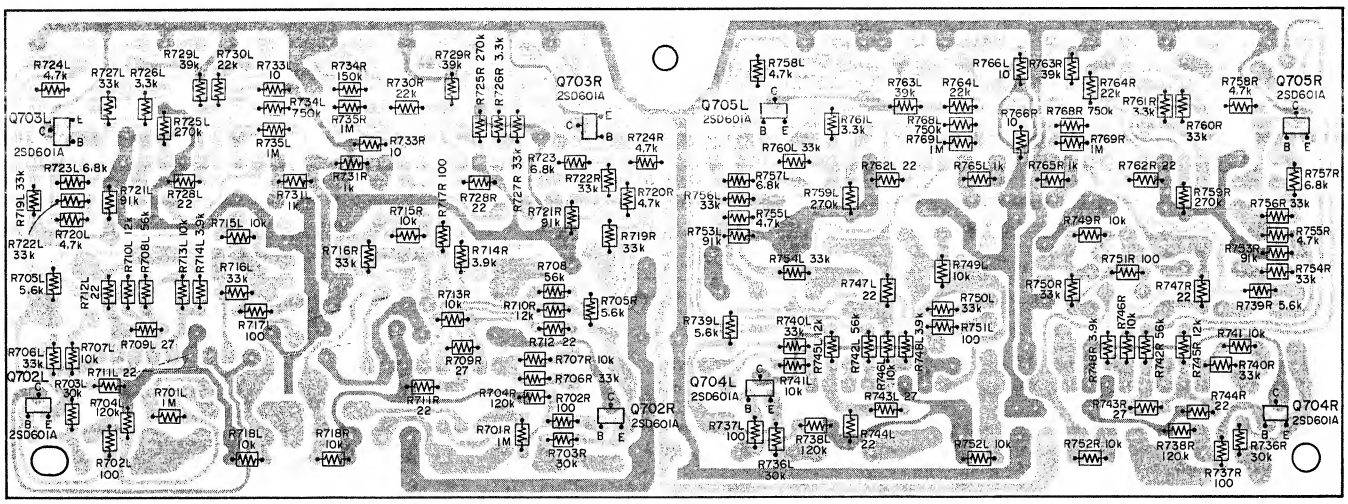

AUTO CAL PCB ASSY (V-900X)

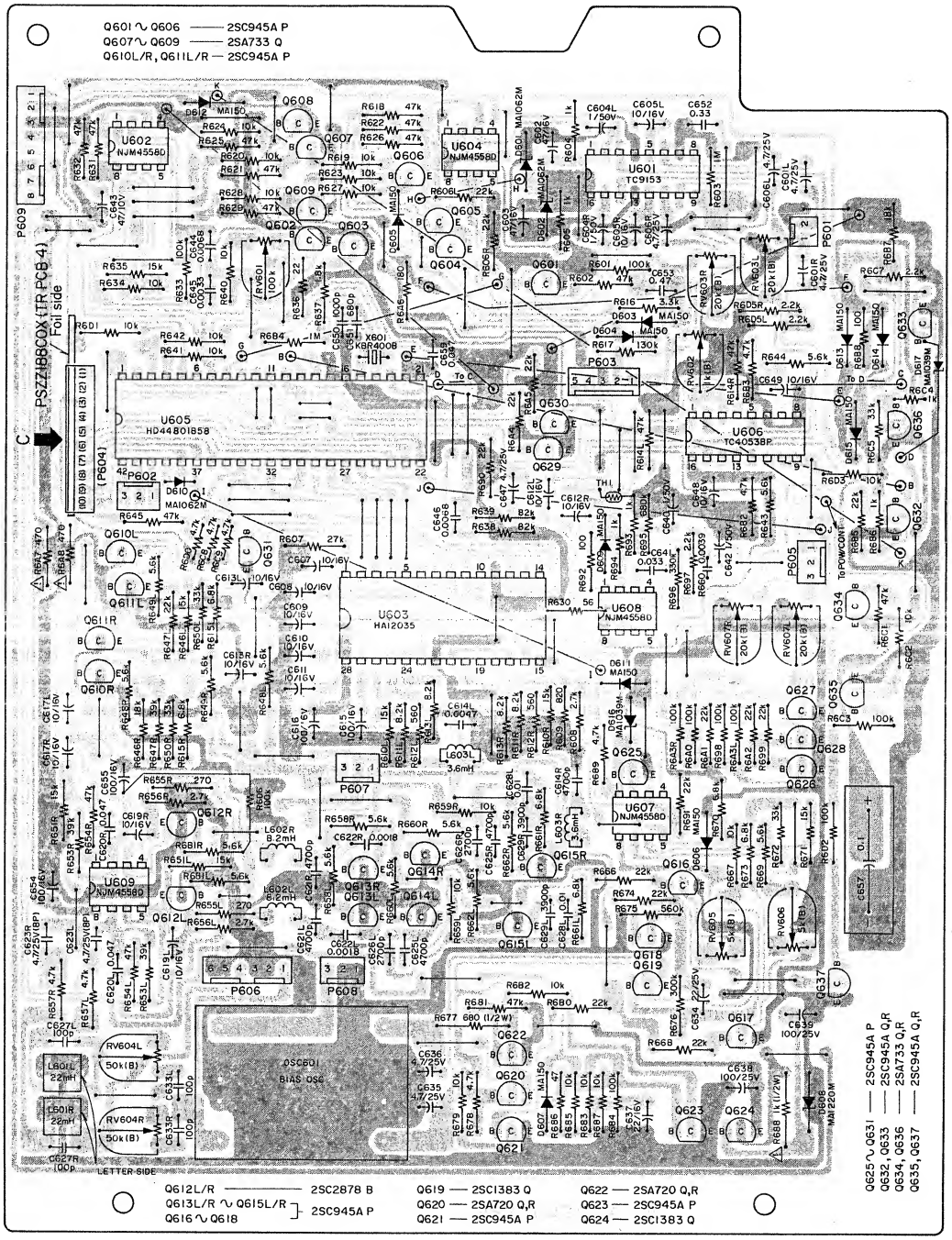

TR PCB 4 ASSY (V-900X)

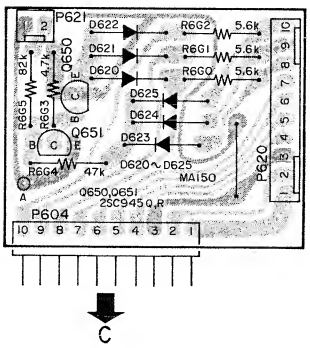

FL DISPLAY PCB ASSY

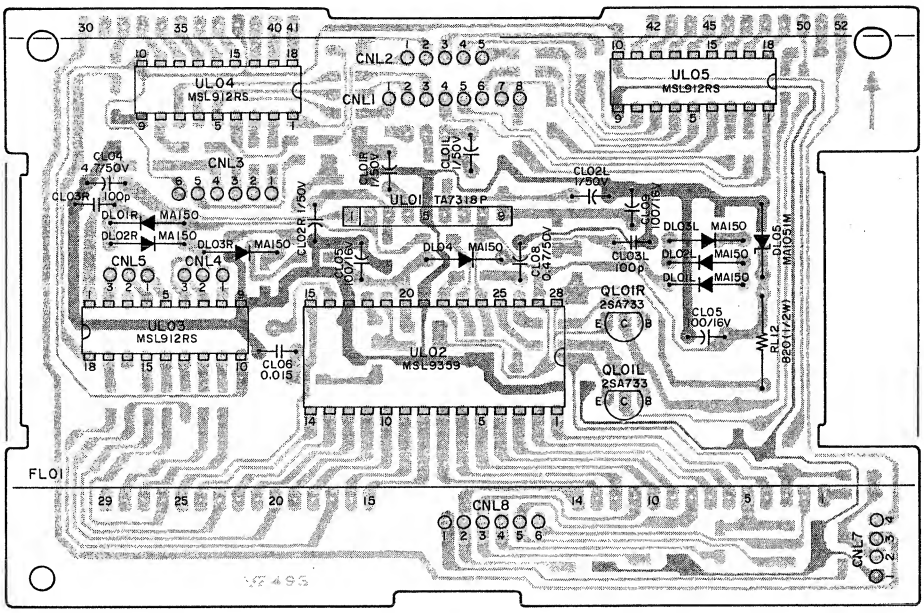

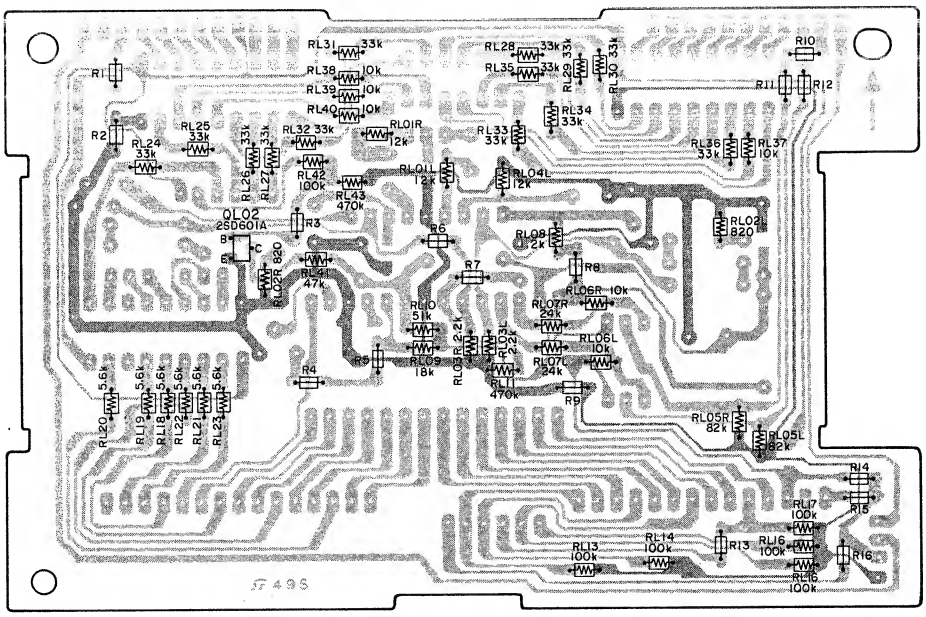

V-800X,V-700 : RL21,RL22,RL23,RL26 Not mounted
R1～R6 : 0 ohm(Jumper)

VR PCB 4 ASSY (V-900X)

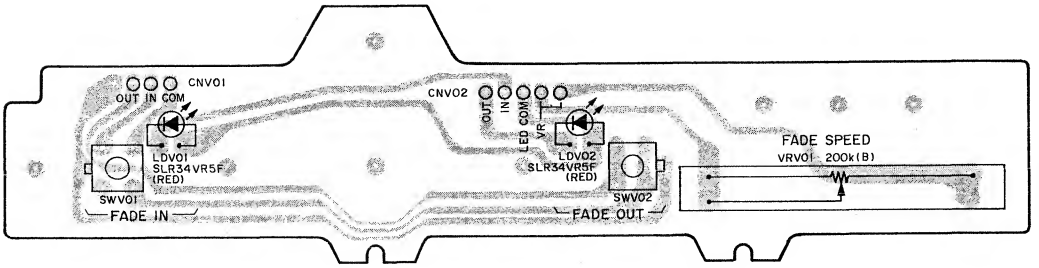

MECHANISM PCB ASSY

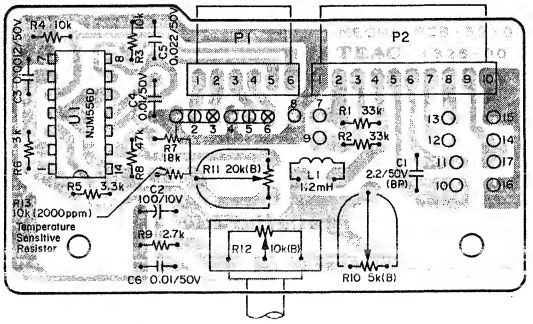

SW L PCB ASSY

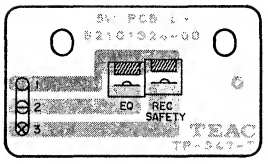

SW R PCB ASSY

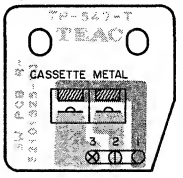

SENSOR PCB ASSY

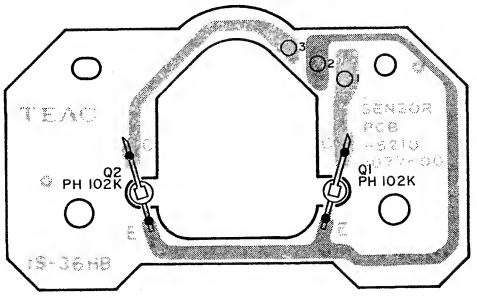

R/P AMPL. PCB ASSY

REF. NO.	PARTS NO.	DESCRIPTION
	*5760554210	PCB Assy (V-900X)
	*5760554200	PCB Assy (V-800X)
	*5760554220	PCB Assy (V-700)
	5760563600	PCB
	IC's	
U601	5760564300	M5220L
U602	5220416200	M5218L
U603	5042738000	NJM4558D (V-800X, V-700)
U701L/R	5760564500	HA12058
U702L/R	5760564500	HA12058
	TRANSISTORS	
Q601L/R	5230775000	2SC2878B
Q602L/R	5145091000	2SC945AK
Q603L/R	5232007200	FET 2SK364BL
Q604L/R	5232007200	FET 2SK364BL
Q605L/R	5232007200	FET 2SK364BL (V-900X) (V-800X)
Q606L/R	5232007200	FET 2SK364BL
Q607L/R	5232007200	FET 2SK364BL
Q608L/R	5232007200	FET 2SK364BL
Q609L/R	5232007200	FET 2SK364BL
Q610L/R	5145091000	2SC945AK
Q611L/R	5232007200	FET 2SK364BL
Q612L/R	5145091000	2SC945AK
Q613L/R	5230775000	2SC2878B
Q614L/R	5232007200	FET 2SK364BL
Q615L/R	5232007200	FET 2SK364BL (V-900X) (V-800X)
Q616L/R	5232007200	FET 2SK364BL
Q617L/R	5230775000	2SC2878B
Q618L/R	5145091000	2SC945AK
Q619L/R	5145091000	2SC945AK
Q620L/R	5145091000	2SC945AK (V-800X) (V-700)
Q621L/R	5145091000	2SC945AK
Q622L/R	5145091000	2SC945AK
Q623	5042553000	2SA733P
Q624	5042553000	2SA733P (V-800X, V-700)
Q625, Q626	5145091000	2SC945AK (V-800X, V-700)
Q627	5042475000	2SC1384Q (V-800X, V-700)
Q628	5145091000	2SC945AK (V-800X, V-700)
Q630	5145091000	2SC945AK (V-900X)
Q701L/R	5145091000	2SC945AK
Q702L/R	5145091000	2SC945AK
	DIODES	
D601L/R	5224015000	1SS133T
D602L/R	5224015000	1SS133T
D603L/R	5224015000	1SS133T
D604L/R	5224015000	1SS133T (V-900X, V-800X)
D605L/R	5224015000	1SS133T
D606L/R	5224015000	1SS133T
D607L/R	5224015000	1SS133T
D608L/R	5224015000	1SS133T
D609, D610	5224015000	1SS133T
D611	5224015000	1SS133T (V-800X, V-700)
D612, D613	5224543101	Zener RD12EB2 (V-800X, V-700)
D615L/R	5224015000	1SS133T
D616L/R	5224015000	1SS133T (V-900X, V-800X)
D617L/R	5224015000	1SS133T
D618, D619	5224015000	1SS133T (V-900X)
D620	5224015000	1SS133T (V-800X, V-700)

REF. NO.	PARTS NO.	DESCRIPTION
	CARBON RESISTORS All resistors are rated ±5% tolerance and 1/8 watt unless otherwise noted.	
R601L/R	5240034020	270kΩ
R602L/R	5240031420	22kΩ
R603L/R	5240026820	270Ω
R604L/R	5240034820	560kΩ
R605L/R	5240033020	100kΩ
R606L/R	5240029820	4.7kΩ
R607L/R	5240030020	5.6kΩ
R608L/R	5240033820	220kΩ
R609L/R	5240030020	5.6kΩ
R610L/R	5240031420	22kΩ
R611L/R	5240030620	10kΩ
R612L/R	5240033020	100kΩ
R613L/R	5240032220	47kΩ (V-900X, V-800X)
R614L/R	5240031420	22kΩ
R615L/R	5240033020	100kΩ
R616L/R	5240030620	10kΩ
R617L/R	5240032220	47kΩ
R618L/R	5240028420	1.2kΩ
R619L/R	5240028220	1kΩ
R620L/R	5240033020	100kΩ
R621L/R	5240029620	3.9kΩ
R622L/R	5240031420	22kΩ
R623L/R	5240025820	100Ω
R624L/R	5240030020	5.6kΩ
R625L/R	5240030020	5.6kΩ
R626L/R	5240031020	15kΩ
R627L/R	5240032020	39kΩ
R628L/R	5240032220	47kΩ
R629L/R	5240026220	150Ω
R630L/R	5240029220	2.7kΩ
R631L/R	⚠5240027420	470Ω
R632L/R	5240029820	4.7kΩ
R633L/R	5240028820	1.8kΩ (V-800X, V-700)
R634L/R	5240029220	2.7kΩ
R635L/R	5240030020	5.6kΩ
R636L/R	5240030020	5.6kΩ
R637L/R	5240030020	5.6kΩ
R638L/R	5240031820	33kΩ
R639L/R	5240031020	15kΩ
R640L/R	5240030020	5.6kΩ
R641L/R	5240031820	33kΩ
R642L/R	5240030020	5.6kΩ
R643	5240030020	5.6kΩ
R644	⚠5240027420	470Ω
R645	5240031820	33kΩ
R646	5240030020	5.6kΩ
R647	5240028220	1kΩ
R648, R649	5240030620	10kΩ
R650	5240030620	10kΩ
R651	5240025020	47Ω (V-800X, V-700)
R652	5240033020	100kΩ
R653, R654	5240030620	10kΩ
R655, R659	5240030020	5.6kΩ
R660	5240030020	5.6kΩ
R661	5240029820	4.7kΩ

Parts marked with * require longer delivery time.

REF. NO.	PARTS NO.	DESCRIPTION		
R662	⚠5240027420	470Ω		
R664, R665	5240030020	5.6kΩ		
R666	5240030020	5.6kΩ	(V-800X, V-700)	
R672L/R	5240033020	100kΩ	(V-900X, V-800X)	
R701L/R	5240030020	5.6kΩ		
R702L/R	5240030420	8.2kΩ		
R703L/R	5240029420	3.3kΩ		
R704L/R	5240031520	24kΩ		
R705L/R	5240030120	6.2kΩ		
R706L/R	5240032820	82kΩ		
R707L/R	5240036120	2MΩ		
R708L/R	5240030620	10kΩ		
R709L/R	5240032620	68kΩ		
R710L/R	5240029820	4.7kΩ		
R711L/R	5240032820	82kΩ		
R712L/R	5240030120	6.2kΩ		
R713L/R	5240032820	82kΩ		
R714L/R	5240028220	1kΩ		
R715L/R	5240029420	3.3kΩ		
R716L/R	5240029920	5.1kΩ		
R717L/R	5240029420	3.3kΩ		
R718L/R	5240034620	470kΩ		
R719L/R	5240029120	2.4kΩ		
R720L/R	5240028220	1kΩ		
R721L/R	5240030020	5.6kΩ		
R722L/R	5240030420	8.2kΩ		
R723L/R	5240029420	3.3kΩ		
R724L/R	5240031520	24kΩ		
R725L/R	5240030120	6.2kΩ		
R726L/R	5240032820	82kΩ		
R727L/R	5240036120	2MΩ		
R728L/R	5240029920	5.1kΩ		
R729L/R	5240032620	68kΩ		
R730L/R	5240030620	10kΩ		
R731L/R	5240029820	4.7kΩ		
R732L/R	5240032820	82kΩ		
R733L/R	5240030120	6.2kΩ		
R734L/R	5240032820	82kΩ		
R735L/R	5240029420	3.3kΩ		
R736L/R	5240028220	1kΩ		
R737L/R	5240029920	5.1kΩ		
R738	⚠5180060000	120Ω	1/2W	
R739	5240031820	33kΩ		
R740, R741	⚠5180060000	120Ω	1/2W	
R742	5240031820	33kΩ		
R743	⚠5180060000	120Ω	1/2W	
R744	5240030020	5.6kΩ		
R745	5240030620	10kΩ		
R746	5240031420	22kΩ	(V-900X)	

CAPACITORS

REF. NO.	PARTS NO.	DESCRIPTION			
C601L/R	5172212000	Ceramic	100pF	50V	
C602L/R	5172218000	Ceramic	330pF	50V	
C603L/R	5260165052	Elec.	47μF	10V	
C604L/R	5260165252	Elec.	47μF	25V	
C605L/R	5170370000	Mylar	0.0056μF	100V	5%
C606L/R	5260162050	Elec.	4.7μF	35V	
C607L/R	5171856000	Mylar	0.01μF	100V	5%
C608L/R	5260162550	Elec.	10μF	16V	
C609L/R	5260160750	Elec.	1μF	50V	
C610L/R	5260165252	Eelc.	47μF	25V	
C611L/R	5260162550	Elec.	10μF	16V	
C612L/R	5170366000	Mylar	0.0039μF	100V	5%
C613L/R	5260162550	Elec.	10μF	16V	
C614L/R	5171872000	Mylar	0.047μF	100V	5%
C615L/R	5170368000	Mylar	0.0047μF	100V	5%
C616L/R	5260166052	Elec.	100μF	16V	
C617L/R	5170358000	Mylar	0.0018μF	100V	5%
C618L/R	5170352000	Mylar	0.001μF	100V	5%
C619L/R	5172212000	Ceramic	100pF	50V	
C620L/R	5171860000	Mylar	0.015μF	100V	5%
C621L/R	5170374000	Mylar	0.0082μF	100V	5%
C622L/R	5171856000	Mylar	0.01μF	100V	5%
C623L/R	5171858000	Mylar	0.012μF	100V	5%
C624	5260163252	Elec.	22μF	10V	
C625	5260162650	Elec.	10μF	25V	
C626, C627	5172212000	Ceramic	100pF	50V	
				(V-800X, V-700)	
C628	5054217000	Ceramic	0.022μF	50V	
				(V-900X)	
C629L/R	5170352000	Mylar	0.001μF	100V	5%
				(V-800X, V-700)	
C701L/R	5260160750	Elec.	1μF	50V	
C703L/R	5171868000	Mylar	0.033μF	100V	5%
C704L/R	5171857000	Mylar	0.01μF	100V	5%
C705L/R	5260162050	Elec.	4.7μF	35V	
C706L/R	5171862000	Mylar	0.018μF	100V	5%
C707L/R	5260220850	Elec.	0.33μF	50V (LL)	
C708L/R	5260220650	Elec.	0.15μF	50V (LL)	
C709L/R	5260220950	Elec.	0.47μF	50V (LL)	
C710L/R	5260221050	Elec.	0.68μF	50V (LL)	
C711L/R	5172207000	Ceramic	39pF	50V	
C712L/R	5170370000	Mylar	0.0056μF	100V	5%
C713L/R	5170368000	Mylar	0.0047μF	100V	5%
C714L/R	5260162050	Elec.	4.7μF	35V	
C715L/R	5263167823	Meta.	0.082μF	50V	5%
C716L/R	5260220650	Elec.	0.15μF	50V (LL)	
C717L/R	5260220950	Elec.	0.47μF	50V (LL)	
C718L/R	5260162550	Elec.	10μF	16V	
C719L/R	5260160750	Elec.	1μF	50V	
C720L/R	5172212000	Ceramic	100pF	50V	
C721L/R	5260165252	Elec.	47μF	25V	
C722L/R	5260162550	Elec.	10μF	16V	
C723L/R	5170362000	Mylar	0.0027μF	100V	5%
C724L/R	5171868000	Mylar	0.033μF	100V	5%
C725L/R	5171856000	Mylar	0.01μF	100V	5%
C726L/R	5260162050	Elec.	4.7μF	35V	
C727L/R	5171862000	Mylar	0.018μF	100V	5%
C728L/R	5260220850	Elec.	0.33μF	50V (LL)	
C729L/R	5260220650	Elec.	0.15μF	50V (LL)	
C730L/R	5260220950	Elec.	0.47μF	50V (LL)	
C731L/R	5260221050	Elec.	0.68μF	50V (LL)	
C732L/R	5260162550	Elec.	10μF	16V	
C733L/R	5172207000	Ceramic	39pF	50V	
C734L/R	5170370000	Mylar	0.0056μF	100V	5%
C735L/R	5170368000	Mylar	0.0047μF	100V	5%
C736L/R	5260162050	Elec.	4.7μF	35V	
C737L/R	5263167823	Meta.	0.082μF	50V	5%
C738L/R	5260220650	Elec.	0.15μF	50V (LL)	
C739L/R	5260220950	Elec.	0.47μF	50V (LL)	
C740L/R	5260162550	Elec.	10μF	16V	
C741	5260162550	Elec.	10μF	16V	

REF. NO.	PARTS NO.	DESCRIPTION		
C742~C744	5260166852	Elec.	220μF	10V
C745	5260162550	Elec.	10μF	16V
C746	5260166852	Elec.	220μF	10V
	VARIABLE RESISTORS All resistors are semi-fixed type.			
RV601L/R	5150233000	20kΩ(B)		
RV602L/R	5150094000	50kΩ(B)	(V-800X, V-700)	
RV603L/R	5150233000	20kΩ(B)		
RV604L/R	5150094000	50kΩ(B)	(V-800X, V-700)	
RV605	5150153000	5kΩ(B)	(V-800X, V-700)	
RV606	5150153000	5kΩ(B)	(V-800X, V-700)	
	COILS			
L601L/R	5760563800	Bias Trap		
L602L/R	5760563900	Peaking 22mH	(V-800X, V-700)	
L603L/R	5760564000	Choke 8.2mH	(V-800X, V-700)	
L701L/R	5760564100	Peaking		
L702L/R	5760564100	Peaking		
	CONNECTORS			
P601, P602	5760564600	8P	(V-900X, V-800X)	
P603	5760564700	2P		
P604	5760564800	5P		
P605	5760563200	3P		
P606	5760557500	4P		
P607	5760563200	3P		
P608	5760564700	2P		
P609	5760557700	10P		
P610	5760563200	3P		
P611	5122130000	Plug, 6P	(V-800X, V-700)	
P612	5122127000	Plug, 3P	(V-800X, V-700)	
P613	5760564700	2P	(V-900X)	
P614, P615	5760564700	2P	(V-800X, V-700)	
P616, P617	5760563200	3P		
P618	5760564700	2P		
P619	5122130000	Plug, 6P		
P620	5760563200	3P	(V-900X)	
	MISCELLANEOUS			
FL701L/R	5760563700	L.P. Filter		
OSC601	5760564200	Bias OSC Block	(V-800X, V-700)	

dbx NR PCB ASSY (V-900X, V-800X)

REF. NO.	PARTS NO.	DESCRIPTION		
	*5760554400	PCB Assy		
	5760566500	PCB		
	IC's			
U701L/R	5220414501	μPC1252H2		
U702L/R	5220414601	μPC1253H2		
U703L/R	5220414501	μPC1252H2		
U704L/R	5220414601	μPC1253H2		
U705, U706	5042738000	NJM4558D		
	TRANSISTORS			
Q701L/R	5232007200	FET	2SK364BL	
Q702L/R	*5760558600	Chip	2SD601A	
Q703L/R	*5760558600	Chip	2SD601A	
Q704L/R	*5760558600	Chip	2SD601A	
Q705L/R	*5760558600	Chip	2SD601A	
	DIODES			
D701L/R	5224015020	1SS133T		
	RESISTORS All resistors are rated ±5% tolerance, 1/8 watt and are chip type unless otherwise noted.			
R701L/R	*5760559000	1MΩ		
R702L/R	*5760559900	100Ω		
R703L/R	*5760560000	30kΩ		
R704L/R	*5760560200	120kΩ		
R705L/R	*5760560100	5.6kΩ		
R706L/R	*5760560500	33kΩ		
R707L/R	*5760559200	10kΩ		
R708L/R	*5760560300	56kΩ		
R709L/R	*5760560400	27Ω		
R710L/R	*5760558700	12kΩ		
R711L/R	*5760560600	22Ω		
R712L/R	*5760560600	22Ω		
R713L/R	*5760559200	10kΩ		
R714L/R	*5760560700	3.9kΩ		
R715L/R	*5760559200	10kΩ		
R716L/R	*5760560500	33kΩ		
R717L/R	*5760559900	100Ω		
R718L/R	*5760559200	10kΩ		
R719L/R	*5760560500	33kΩ		
R720L/R	*5760560800	4.7kΩ		
R721L/R	*5760560900	91kΩ		
R722L/R	*5760560500	33kΩ		
R723L/R	*5760561000	6.8kΩ		
R724L/R	*5760560800	4.7kΩ		
R725L/R	*5760561100	270kΩ		
R726L/R	*5760561200	3.3kΩ		
R727L/R	*5760560500	33kΩ		
R728L/R	*5760560600	22Ω		
R729L/R	*5760561300	39kΩ		
R730L/R	*5760561500	22kΩ		
R731L/R	*5760561600	1kΩ		
R732L/R	*5240319000	22MΩ	1/2W	Carbon
R733L/R	*5760576300	10Ω		
R734L/R	*5760576400	750kΩ		
R735L/R	*5760559000	1MΩ		

Parts marked with * require longer delivery time.

REF. NO.	PARTS NO.	DESCRIPTION			
R736L/R	*5760560000	30kΩ			
R737L/R	*5760559900	100Ω			
R738L/R	*5760560200	120kΩ			
R739L/R	*5760560100	5.6kΩ			
R740L/R	*5760560500	33kΩ			
R741L/R	*5760559200	10kΩ			
R742L/R	*5760560300	56kΩ			
R743L/R	*5760560400	27Ω			
R744L/R	*5760560600	22Ω			
R745L/R	*5760558700	12kΩ			
R746L/R	*5760559200	10kΩ			
R747L/R	*5760560600	22Ω			
R748L/R	*5760560700	3.9kΩ			
R749L/R	*5760559200	10kΩ			
R750L/R	*5060560500	33kΩ			
	*				
R751L/R	*5760559900	100Ω			
R752L/R	*5760559200	10kΩ			
R753L/R	*5760560900	91kΩ			
R754L/R	*5760560500	33kΩ			
R755L/R	*5760560800	4.7kΩ			
R756L/R	*5760560500	33kΩ			
R757L/R	*5760561000	6.8kΩ			
R758L/R	*5760560800	4.7kΩ			
R759L/R	*5760561100	270kΩ			
R760L/R	*5760560500	33kΩ			
R761L/R	*5760561200	3.3kΩ			
R762L/R	*5760560600	22Ω			
R763L/R	*5760561300	39kΩ			
R764L/R	*5760561500	22kΩ			
R765L/R	*5760561600	1kΩ			
R766L/R	*5760576300	10Ω			
R767L/R	5240319000	22MΩ	1/2W	Carbon	
R768L/R	*5760576400	750kΩ			
R769L/R	*5760559000	1MΩ			
	CAPACITORS				
C701L/R	5260160750	Elec.	1μF	50V	
C702L/R	5263167923	Meta.	0.1μF	50V	5%
C703L/R	5263167923	Meta.	0.1μF	50V	5%
C704L/R	5263169523	Meta.	0.3μF	50V	5%
C705L/R	5263106120	Poly.	200pF	100V	5%
C706L/R	5172212000	Ceramic	100pF	50V	
C707L/R	5171856000	Mylar	0.01μF	100V	5%
C708L/R	5260066550	Elec.	4.7μF	35V (BP)	
C709L/R	5263167923	Meta.	0.1μF	50V	5%
C710L/R	5263167923	Meta.	0.1μF	50V	5%
C711L/R	5170364000	Mylar	0.0033μF	100V	5%
C712L/R	5170364000	Mylar	0.0033μF	100V	5%
C713L/R	5172218000	Ceramic	330pF	50V	
C714L/R	5263167923	Meta.	0.1μF	50V	5%
C715L/R	5171856000	Mylar	0.01μF	100V	5%
C716L/R	5260160750	Elec.	1μF	50V	
C717L/R	5260162550	Elec.	10μF	16V	
C718L/R	5260227010	Elec.	10μF	35V (LL)	
C719L/R	5263167923	Meta.	0.1μF	50V	5%
C720L/R	5263167923	Meta.	0.1μF	50V	5%
C721L/R	5263169523	Meta.	0.3μF	50V	5%
C722L/R	5171856000	Mylar	0.01μF	100V	5%
C723L/R	5172212000	Ceramic	100pF	50V	
C724L/R	5172212000	Ceramic	100pF	50V	
C725L/R	5263167923	Meta.	0.1μF	50V	5%

REF. NO.	PARTS NO.	DESCRIPTION			
C726L/R	5260066550	Elec.	4.7μF	35V (BP)	
C727L/R	5263167923	Meta.	0.1μF	50V	5%
C728L/R	5170364000	Mylar	0.0033μF	100V	5%
C729L/R	5170364000	Mylar	0.0033μF	100V	5%
C730L/R	5172218000	Ceramic	330pF	50V	
C731L/R	5263167923	Meta.	0.1μF	50V	5%
C732L/R	5171856000	Mylar	0.01μF	100V	5%
C733L/R	5260160750	Elec.	1μF	50V	
C734L/R	5260162550	Elec.	10μF	16V	
C735L/R	5260227010	Elec.	10μF	35V (LL)	
C740, C741	5260165252	Elec.	47μF	25V	
	VARIABLE RESISTORS				
RV701L/R	5150156000	Semi-fixed, 50kΩ (B)			
RV702L/R	5150154000	Semi-fixed, 10kΩ (B)			
RV703L/R	5150156000	Semi-fixed, 50kΩ (B)			
RV704L/R	5150156000	Semi-fixed, 50kΩ (B)			
RV705L/R	5150154000	Semi-fixed, 10kΩ (B)			
RV706L/R	5150156000	Semi-fixed, 50kΩ (B)			
	CONNECTORS				
P701, P702	5760566600	8P			

Parts marked with * require longer delivery time.

AUTO CAL PCB ASSY (V-900X)

REF. NO.	PARTS NO.	DESCRIPTION
	*5760571600	PCB Assy
	5760572100	PCB
	IC's	
U601	5760572700	TC9153
U602	5042738000	NJM4558D
U603	5760572800	HA12035
U604	5042738000	NJM4558D
U605	5760572900	HD44801B58
U606	5760573000	TC4053BP
U607~U609	5042738000	NJM4558D
	TRANSISTORS	
Q601 ~ Q606	5145091000	2SC945AK
Q607 ~ Q609	5042553000	2SA733P
Q610L/R	5145091000	2SC945AK
Q611L/R	5145091000	2SC945AK
Q612L/R	5230775000	2SC2878B
Q613L/R	5145091000	2SC945AK
Q614L/R	5145091000	2SC945AK
Q615L/R	5145091000	2SC945AK
Q616~Q618	5145091000	2SC945AK
Q619	5042475000	2SC1384Q
Q620	5145043000	2SA720Q
Q621	5145091000	2SC945AK
Q622	5145043000	2SA720Q
Q623	5145091000	2SC945AK
Q624	5042475000	2SC1384Q
Q625~Q633	5145091000	2SC945AK
Q634	5042553000	2SA733P
Q635	5145091000	2SC945AK
Q636	5042553000	2SA733P
Q637	5145091000	2SC945AK
	DIODES	
D601, D602	5224540910	Zener RD6.2EB2
D603~D607	5224015020	1SS133T
D608	5224545001	Zener RD22EB2
D609~D615	5224015020	1SS133T
D616, D617	5224539501	Zener RD3.9EB2
	CARBON RESISTORS	
	All resistors are rated ±5% tolerance and 1/4 watt unless otherwise noted.	
R6A0	5181530000	100kΩ
R6A1, R6A2	5181514000	22kΩ
R6A3L/R	5181530000	100kΩ
R6A4, R6A5	5181514000	22kΩ
R6A6	5181464000	180Ω
R6A7, R6A8 ⚠	5181474000	470Ω
R6B1L/R	5181478000	680Ω
R6B2, R6B3	5181498000	4.7kΩ
R6B4	5181554000	1MΩ
R6B5	5181514000	22kΩ
R6B7	5181512000	18kΩ
R6B8	5181458000	100Ω
R6C1	5181522000	47kΩ
R6C2	5181506000	10kΩ
R6C3	5181530000	100kΩ

REF. NO.	PARTS NO.	DESCRIPTION
R6C4	5181506000	10kΩ
R6C5	5181518000	33kΩ
R6C7	5181490000	2.2kΩ
R6C8, R6C9	5181498000	4.7kΩ
R6D0	5181498000	4.7kΩ
R6D1	5181506000	10kΩ
R6D2	5181530000	100kΩ
R6D3	5181506000	10kΩ
R6D5L/R	5181490000	2.2kΩ
R6D6	5181530000	100kΩ
R601	5181530000	100kΩ
R602	5181522000	47kΩ
R603	5181554000	1MΩ
R604, R605	5181482000	1kΩ
R606L/R	5181514000	22kΩ
R607	5181516000	27kΩ
R608	5181492000	2.7kΩ
R609	5181480000	820Ω
R610L/R	5181510000	15kΩ
R611L/R	5181504000	8.2kΩ
R612L/R	5181476000	560Ω
R613L/R	5181504000	8.2kΩ
R614L/R	5181522000	47kΩ
R615L/R	5181502000	6.8kΩ
R616	5181494000	3.3kΩ
R617	5181533000	130kΩ
R618	5181522000	47kΩ
R619, R620	5181506000	10kΩ
R621, R622	5181522000	47kΩ
R623, R624	5181506000	10kΩ
R625, R626	5181522000	47kΩ
R627, R628	5181506000	10kΩ
R629	5181522000	47kΩ
R630	5181452000	56Ω
R631, R632	5181522000	47kΩ
R633	5181530000	100kΩ
R634	5181506000	10kΩ
R635	5181510000	15kΩ
R636	5181442000	22Ω
R637	5181488000	1.8kΩ
R638, R639	5181528000	82kΩ
R640, R641	5181506000	10kΩ
R642	5181506000	10kΩ
R643, R644	5181500000	5.6kΩ
R645	5181522000	47kΩ
R646L/R	5181510000	15kΩ
R647L/R	5181514000	22kΩ
R648L/R	5181500000	5.6kΩ
R649L/R	5181500000	5.6kΩ
R650L/R	5181518000	33kΩ
R651L/R	5181510000	15kΩ
R653L/R	5181520000	39kΩ
R654L/R	5181520000	47kΩ
R655L/R	5181462000	150Ω
R656L/R	5181492000	2.7kΩ
R657L/R	5181498000	4.7kΩ
R658L/R	5181500000	5.6kΩ
R659L/R	5181510000	15kΩ
R660L/R	5181500000	5.6kΩ
R661L/R	5181506000	10kΩ

Parts marked with * require longer delivery time.

REF. NO.	PARTS NO.	DESCRIPTION	
R662L/R	5181500000	5.6kΩ	
R666	5181514000	22kΩ	
R667	5181506000	10kΩ	
R668	5181514000	22kΩ	
R669	5181498000	4.7kΩ	
R670	5181502000	6.8kΩ	
R671	5181510000	15kΩ	
R672	5181518000	33kΩ	
R673	5181502000	6.8kΩ	
R674	5181514000	22kΩ	
R675	5181548000	560kΩ	
R676	5181541000	300kΩ	
R677	5180078000	680Ω	1/2W
R678	5181522000	47kΩ	
R679	5181506000	10kΩ	
R680	5181514000	22kΩ	
R681	5181522000	47kΩ	
R682, R683	5181506000	10kΩ	
R684	5181530000	100kΩ	
R685	5181506000	10kΩ	
R686	5181450000	47Ω	
R687	5181506000	10kΩ	
R688	⚠5180082000	1kΩ	1/2W
R689	5181498000	4.7kΩ	
R690, R691	5181514000	22kΩ	
R692	5181458000	100Ω	
R694	5181482000	1kΩ	
R695	5181550000	680kΩ	
R696	5181542000	330kΩ	
R697	5181490000	2.2kΩ	
R698	5181530000	100kΩ	
R699	5181514000	22kΩ	

CAPACITORS

C601L/R	5260162050	Elec.	4.7μF	35V	
C602, C603	5260165252	Elec.	47μF	25V	
C604L/R	5260160750	Elec.	1μF	50V	
C605L/R	5260162550	Elec.	10μF	16V	
C606L/R	5260162050	Elec.	4.7μF	35V	
C607~C611	5260162550	Elec.	10μF	16V	
C612L/R	5260162550	Elec.	10μF	16V	
C613L/R	5260162550	Elec.	10μF	16V	
C614L/R	5170368000	Mylar	0.0047μF	100V	
C615, C616	5260166052	Elec.	100μF	16V	
C617L/R	5260162550	Elec.	10μF	16V	
C619L/R	5260162550	Elec.	10μF	16V	
C620L/R	5171872000	Mylar	0.047μF	100V	
C621L/R	5170368000	Mylar	0.0047μF	100V	
C622L/R	5170358000	Mylar	0.0018μF	100V	
C623L/R	5260066550	Elec.	4.7μF	35V	(BP)
C625L/R	5170368000	Mylar	0.0047μF	100V	
C626L/R	5170362000	Mylar	0.0027μF	100V	
C627L/R	5172212000	Ceramic	100pF	50V	
C628L/R	5171856000	Mylar	0.01μF	100V	
C629L/R	5170360000	Mylar	0.0022μF	100V	
C633L/R	5760572200	Ceramic	100pF	500V	
C634	5260163452	Elec.	22μF	25V	
C635, C636	5260162050	Elec.	4.7μF	35V	
C637	5260163452	Elec.	22μF	25V	

REF. NO.	PARTS NO.	DESCRIPTION			
C638, C639	5260166152	Elec.	100μF	25V	
C640	5260162550	Elec.	10μF	16V	
C641	5171868000	Mylar	0.033μF	100V	
C642	5260160750	Elec.	1μF	50V	
C643	5260165052	Elec.	47μF	10V	
C644	5760572300	Poly.	0.0068μF	100V	2%
C645	5170364000	Mylar	0.0033μF	100V	
C646	5760572300	Poly.	0.0068μF	100V	2%
C647	5260162050	Elec.	4.7μF	35V	
C648, C649	5260162550	Elec.	10μF	16V	
C650	5173430000	Ceramic	1000pF	50V	
C651	5172322000	Ceramic	680pF	50V	
C652	5263168523	Meta.	0.33μF	50V	
C653	5263168723	Meta.	0.47μF	50V	
C654, C655	5260166052	Elec.	100μF	16V	
C657	5760572400	Elec.	0.1F	5.5V	
C659	5173435000	Ceramic	0.047μF	50V	
C660	5170366000	Mylar	0.0039μF	100V	

VARIABLE RESISTORS

RV601	5150096000	Semi-fixed, 100kΩ (B)
RV602	5053446000	Semi-fixed, 1kΩ (B)
RV603L/R	5150233300	Semi-fixed, 20kΩ (B)
RV604L/R	5150094000	Semi-fixed, 50kΩ (B)
RV605L/R	5150097000	Semi-fixed, 5kΩ (B)
RV606	5150097000	Semi-fixed, 5kΩ (B)
RV607L/R	5150233000	Semi-fixed, 20kΩ (B)

COILS

L601L/R	5760563900	Peaking, 22mH
L602L/R	5760564000	Choke, 8.2mH
L603L/R	5760572500	Choke, 3.6mH

CONNECTORS

P601	5760564700	2P
P602	5760563200	3P
P603	5760564800	5P
P605	5760563200	3P
P606	5122130000	Plug, 6P
P607	5760563200	3P
P608	5122127000	Plug, 3P
P609	5760565600	8P

MISCELLANEOUS

OSC601	5760572600	OSC Block
X601	5347001100	Ceramic OSC, KBR-400B
TH1	5760573100	Thermistor, 10K

NR SW PCB ASSY

REF. NO.	PARTS NO.	DESCRIPTION
	*5760554600	PCB Assy (V-900X, V-800X)
	*5760554610	PCB Assy (V-700)
	5760557200	PCB
	TRANSISTOR	
QS01	5145091000	2SC945AK
	DIODES	
DS01~DS05	5224015020	1SS133T (V-900X, V-800X)
DS06	5224015020	1SS133T
DS07	5224015020	1SS133T (V-900X, V-800X)
DS08, DS09	5224015020	1SS133T (V-900X, V-800)
	CARBON RESISTORS All resistors are rated ± 5% tolerance and 1/8 watt.	
RS01~RS05	5240032220	47kΩ (V-900X, V-800X)
RS06~RS08	5240032220	47kΩ
RS09	5240031220	18kΩ
RS10	5240028220	1kΩ
	MISCELLANEOUS	
SS01	5760557300	Push Switch (V-900X, V-800X)
	5760557400	Push Switch (V-700)
JS01	5760557500	Connector, 4P (V-700)
	5760557600	Connector, 6P (V-900X, V-800X)
JS02	5760557700	Connector, 10P

KEY SW PCB 1 ASSY

REF. NO.	PARTS NO.	DESCRIPTION
	*5760567500	PCB Assy
	5760568600	PCB
LDC01	5760568900	LED, SLR34VR5F
LDC02	5760568900	LED, SLR34VR5F
LDC03	5760568900	LED, SLR34VR5F
LDC05	5760569000	LED, SLR34MG5F
SC01~SC08	5760568500	Switch, Key
CNS01	5760568700	Conn. Cord Assy
CNS02	5760568800	Conn. Cord Assy
	5760569100	Shield, SW
	5760569200	Barier, SW

KEY SW PCB 2 ASSY

REF. NO.	PARTS NO.	DESCRIPTION
	*5760567410	PCB Assy (V-900X)
	*5760567400	PCB Assy (V-800X, V-700)
	5760568200	PCB
SC20~SC22	5760568500	Switch, Key
SC23	5760568500	Switch, Key (V-900X)
SC24, SC25	5760568500	Switch, Key
SC26~SC28	5760568500	Switch, Key (V-900X)
CNS03	5760568400	Conn. Cord Assy (V-900X)
	5760568300	Conn. Cord Assy (V-800X, V-700)

Parts marked with * require longer delivery time.

VR PCB 1 ASSY

REF. NO.	PARTS NO.	DESCRIPTION
	*5760567200	PCB Assy
	5760567700	PCB
VRV12	5760567800	Var. Res., 10kΩ (A) x 2
P004	5760564800	Connector, 5P

VR PCB 2 ASSY

REF. NO.	PARTS NO.	DESCRIPTION
	*5760567310	PCB Assy (V-900X)
	*5760567300	PCB Assy (V-800X, V-700)
	5760567900	PCB
RV01	5240031020	Carbon Res. 15kΩ 1/8W 5% (V-800X, V-700)
VRV10	5760568100	Var. Res., 100kΩ (A) (V-900X)
	5760568000	Var. Res., 100kΩ (V-800X, V-700)
VRV11	5760568100	Var. Res., 100kΩ (A) (V-900X)
P014	5760564700	Connector, 2P (V-800X, V-700)
P116	5760556800	Connector, 3P (V-900X)
P121	5760563200	Connector, 3P (V-900X)

MONITOR SW PCB ASSY

REF. NO.	PARTS NO.	DESCRIPTION
	*5760554510	PCB Assy (V-900X)
	*5760554500	PCB Assy (V-800X, V-700)
	5760556700	PCB
SS05	5760557100	Push Switch (V-900X)
	5760557000	Push Switch (V-800X, V-700)
PS01	5760556900	Connector, 5P (V-900X)
	5760556800	Connector, 3P (V-800X, V-700)

PHONES PCB ASSY

REF. NO.	PARTS NO.	DESCRIPTION
	*5760564900	PCB Assy
	5760562500	PCB
C3	5173435000	Ceramic Cap., 0.047μF 50V
JZ01	5760562600	Jack, PHONES
P005	5760556800	Connector, 3P
	5760551500	Bracket, Jack

IN/OUTPUT PCB ASSY

REF. NO.	PARTS NO.	DESCRIPTION
	*5760556400	PCB Assy
	5760563000	PCB
RZ01L/R	5240029000	Carbon Res., 2.2kΩ 1/8W 5%
JZ01	5760563100	Jack, 4P
PZ01, PZ02	5760563200	Connector, 3P

MPX SW PCB ASSY

REF. NO.	PARTS NO.	DESCRIPTION
	*5760554700	PCB Assy
	5760557800	PCB
SS02	5760558000	Push Switch
PC01	5760557900	PC Joint

VR PCB 4 ASSY (V-900X)

REF. NO.	PARTS NO.	DESCRIPTION
	*5760573700	PCB Assy
	5760573900	PCB
VRV01	5760574200	Var. Res., Slide; 200kΩ (B)
LDV01	5760568900	LED, SLR34VR5F
LDV02	5760568900	LED, SLR34VR5F
SWV01	5760568500	Switch, Key
SWV02	5760568500	Switch, Key

MECHANISM PCB ASSY

REF. NO.	PARTS NO.	DESCRIPTION
	*5200132601	PCB Assy
	5210132600	PCB
	IC	
U1	5220422100	NJM556D
	RESISTORS	
	All resistors are rated ±5% tolerance, 1/8 watt and are carbon type unless otherwise noted.	
R1, R2	5240031820	33kΩ
R3, R4	5240030620	10kΩ
R5	5240029420	3.3kΩ
R6	5240029320	3kΩ
R7	5181312000	18kΩ 1/4W
R8	5240032220	47kΩ
R9	5240029220	2.7kΩ
R13	5242115901	10kΩ 2000 ppm Temperature Sensitive
	CAPACITORS	
C1	5260065850	Elec. 2.2μF 50V (BP)
C2	5260165952	Elec. 100μF 10V
C3	5263100720	Poly. 0.0012μF 100V 5%
C4	5263166723	Meta. 0.01μF 50V 5%
C5	5171864000	Mylar 0.022μF 100V 5%
C6	5263166723	Meta. 0.01μF 50V 5%
	VARIABLE RESISTORS	
R10	5280003302	Semi-fixed, 5kΩ (B)
R11	5280003602	Semi-fixed, 20kΩ (B)
R12	5282010800	10kΩ (B)
	MISCELLANEOUS	
L1	5286006700	Coil, Choke; 1.2mH
P1	5122149000	Connector, Plug; 6P
P2	5122153000	Connector, Plug; 10P

SW PCB L ASSY

REF. NO.	PARTS NO.	DESCRIPTION
	*5200132400	PCB Assy
	5210132400	PCB
	5301753100	Switch, Leaf

SW PCB R ASSY

REF. NO.	PARTS NO.	DESCRIPTION
	*5200132500	PCB Assy
	5210132500	PCB
	5301753100	Switch, Leaf

SENSOR PCB ASSY

REF. NO.	PARTS NO.	DESCRIPTION
	*5200107700	PCB Assy
	5210107700	PCB
Q1, Q2	5228008300	Photo Transistor, PH-102K

VR PCB 3 ASSY (V-800X, V-700) (PC Board Omitted)

REF. NO.	PARTS NO.	DESCRIPTION
	*5760567600	PCB Assy
	5760569300	PCB
VRV01	5284006500	Var. Res., Slide; 100kΩ (A) x 2
CNV03	5760569400	Conn. Cord Assy
CNV04	5760569500	Conn. Cord Assy
	5760569600	Shield, Slide VR
	5760569700	Barrier

POWER SW PCB ASSY (PC Board Omitted)

REF. NO.	PARTS NO.	DESCRIPTION
	*5760556500	PCB Assy [J, US, C]
	*5760556510	PCB Assy [GE, E, UK, A]
	5760563300	PCB
SS801	⚠5300031900	Switch, Push
CS801	⚠5760563400	Mylar Cap., 0.047μF 125V [J, US, C]
CS801	⚠5760563500	Mylar Cap., 0.01μF 250V [GE, E, UK, A]

Parts marked with * require longer delivery time.

[US]: U.S.A. [C]: CANADA [GE]: GENERAL EXPORT [E]: EUROPE [UK]: U.K.
[A]: AUSTRALIA [J]: JAPAN

8 IC BLOCK DIAGRAMS

ICブロック・ダイヤグラム

MB8841H-1248

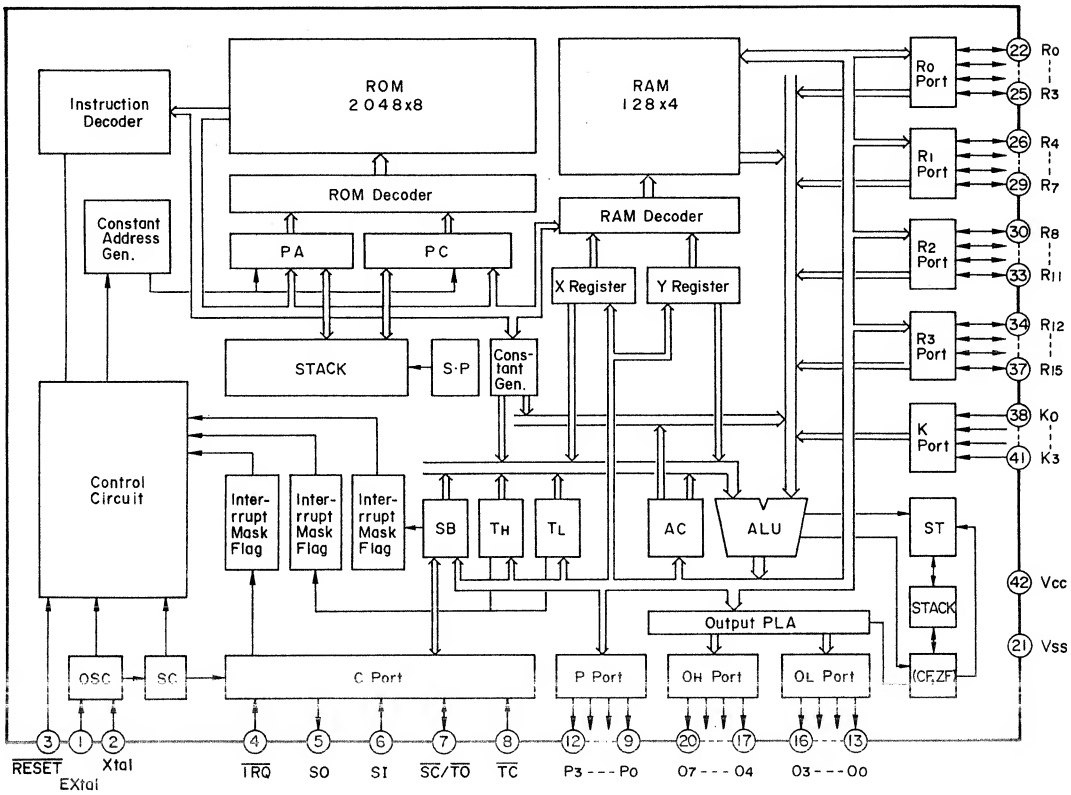

MSL9359RS

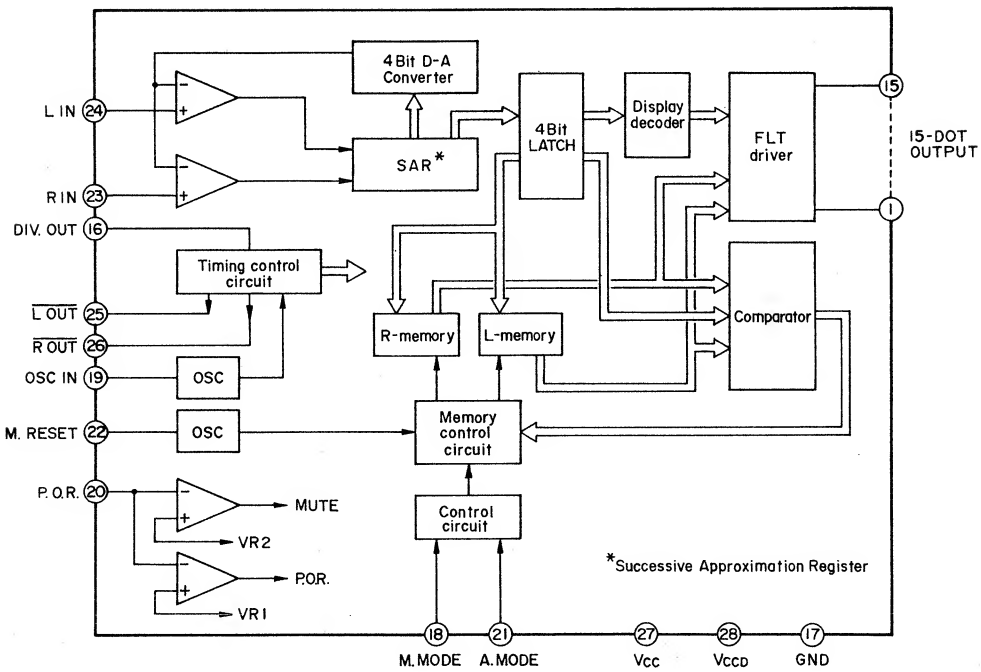

TC9153P

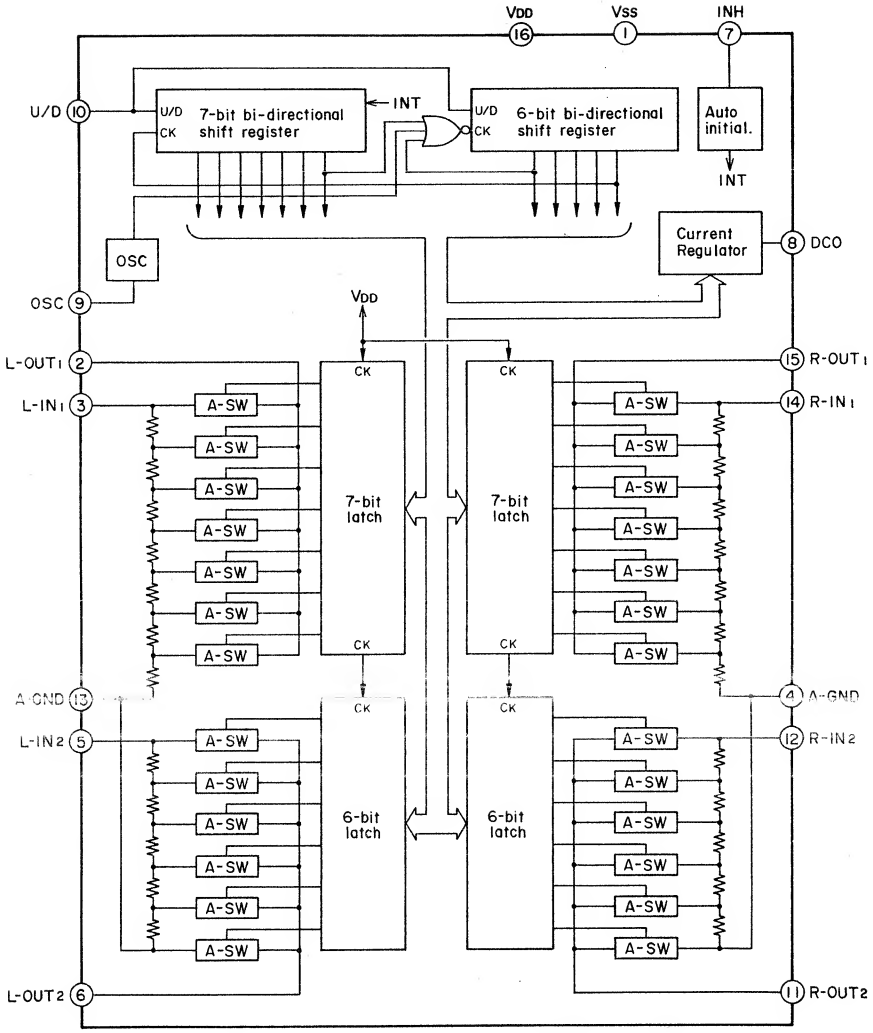

HA12035
(TOP VIEW)

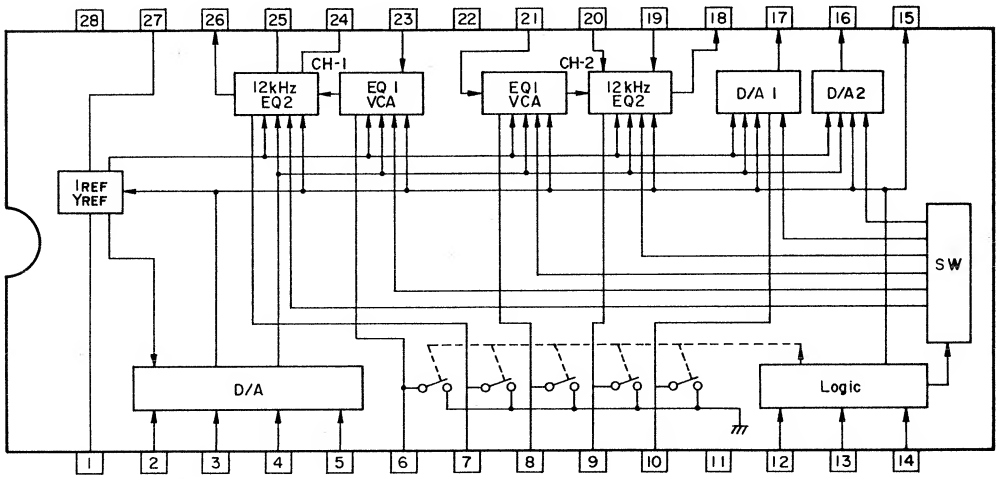

TA7318P

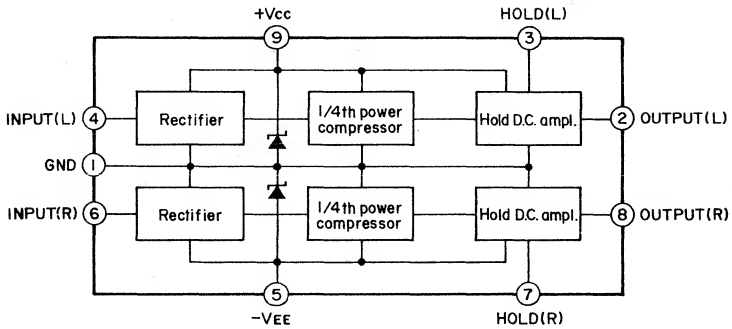

LA2000

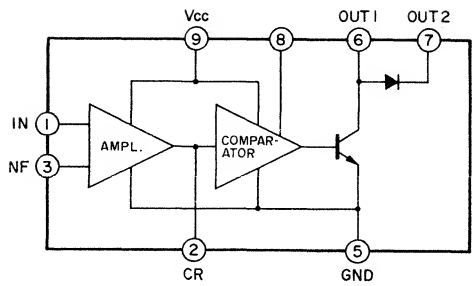

TC4053BP

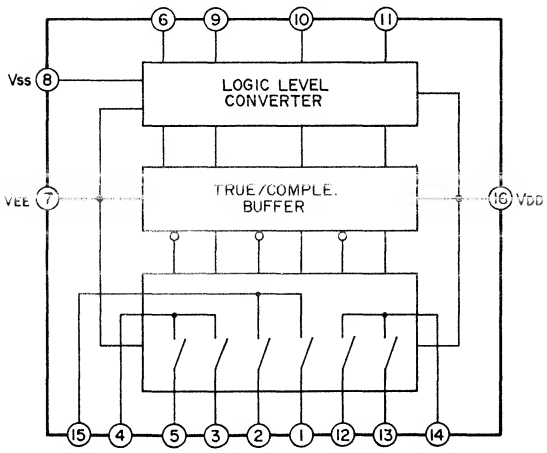

NJM556D
(TOP VIEW)

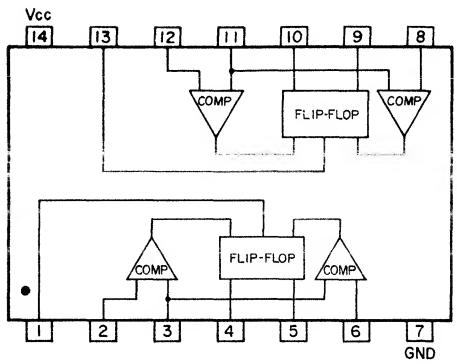

μPC1252H2

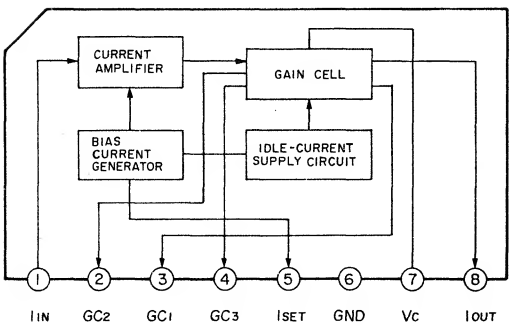

μPC1253H2

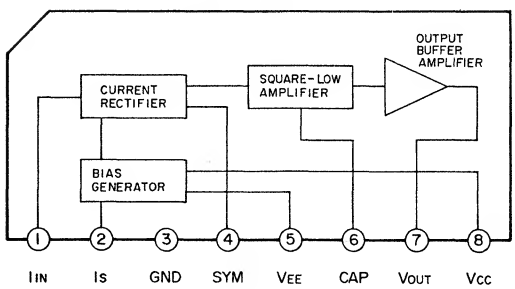

MSL912RS
(TOP VIEW)

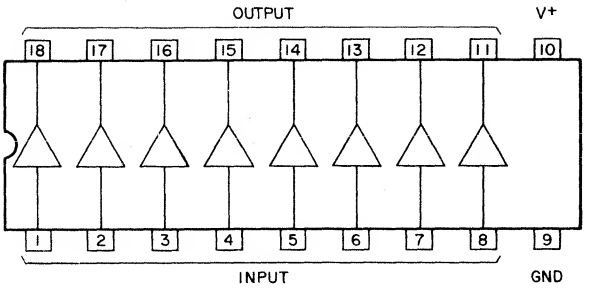

NJM4558D
(TOP VIEW)

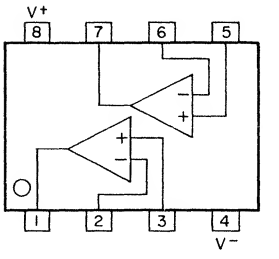

M54560P
(TOP VIEW)

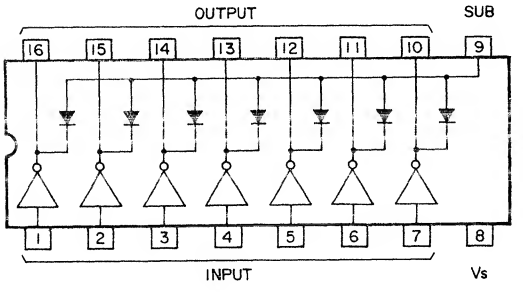

BA618
(TOP VIEW)

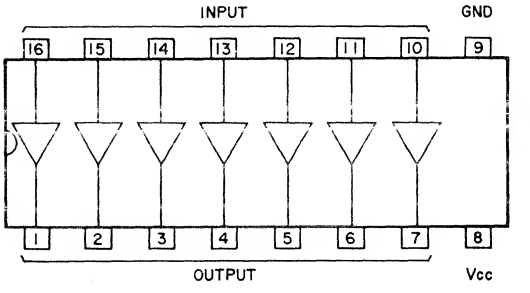

M5218L
M5219L
M5220L

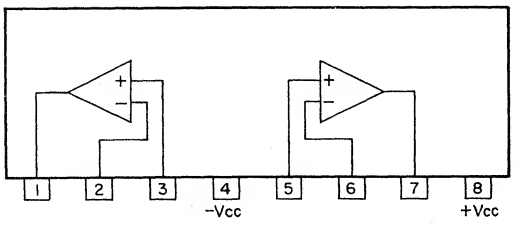

M54545L

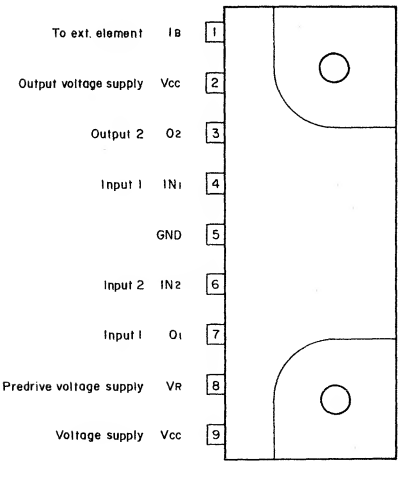

V-900X/V-800X/V-700

TEAC®

ティアック株式会社

	本社 営業部	180・東京都武蔵野市中町3－7－3		電話 武蔵野 (0422) 53-1111(代)
製品についてのお問合わせ サービスに関するお問合わせ	札幌営業所	064・札幌市中央区南7条西2－2	くぼたビル	電話 札幌 (011)521-4101(代)
	仙台営業所	980・仙台市1番町2－5－5	中央ビル	電話 仙台 (0222) 27-1501(代)
	大宮営業所	330・大宮市桜木町4－2	ローズベイ大宮ビル	電話 大宮 (0486) 42-4551(代)
	東京営業所	100・東京都千代田区永田町2－10－7	星ガ岡会館	電話 東京 (03)592-1831(代)
	千代田営業所	100・東京都千代田区永田町2－10－7	星ガ岡会館	電話 東京 (03)592-1836(代)
	千葉出張所	280・千葉市松波1－11－3	石橋松波ビル	電話 千葉 (0472) 55-1281(代)
	立川営業所	190・東京都立川市栄町4－13－2		電話 立川 (0425) 25-4721(代)
	横浜営業所	221・横浜市神奈川区沢渡1－1	高島台第一ビル	電話 横浜 (045)312-3270(代)
	名古屋営業所	464・名古屋市千種区東山通り3－2－3		電話 名古屋 (052)782-4581(代)
	静岡出張所	420・静岡市中島大割286－1		電話 静岡 (0542) 81-6561(代)
	大阪営業所	564・大阪府吹田市垂水町3－34－10		電話 大阪 (06)384-5201(代)
	京都出張所	600・京都市下京区大宮通四条下ル四条大宮町21番地	三虎ビル	電話 京都 (075)842-0751(代)
	神戸出張所	650・神戸市中央区山本通り3－1－3	谷口マンション内	電話 神戸 (078)242-2458(代)
	岡山出張所	700・岡山市十日市中町1番40号		電話 岡山 (0862) 25-8601(代)
	広島営業所	733・広島市中区中島町10－24		電話 広島 (082)243-3581(代)
	福岡営業所	812・福岡市博多区博多駅東2－17－5	モリ・メンビル	電話 福岡 (092)431-5781(代)
サービスに関するお問合わせ	本社サービス1課	180・東京都武蔵野市中町3－7－3		電話 武蔵野 (0422) 53-3242(代)
	沖縄サービスセンター	901-22・沖縄県宜野湾市字喜友名229		電話 沖縄 (09889) 2-2020(代)
技術的なお問合わせ	テープデッキ相談室	180・東京都武蔵野市中町3－7－3		電話 武蔵野 (0422) 53-9213(代)

TEAC CORPORATION	3-7-3 NAKA-CHO MUSASHINO TOKYO PHONE (0422) 53-1111
TEAC CORPORATION OF AMERICA	7733 TELEGRAPH ROAD MONTEBELLO CALIFORNIA 90640 PHONE (213) 726-0303
TEAC AUSTRALIA PTY., LTD.	115 WHITEMAN STREET SOUTH MELBOURNE VICTORIA 3205 PHONE 699-6000

PRINTED IN JAPAN 0484SYU1.91 D-4549A

REF. NO.	PARTS NO.	DESCRIPTION	REMARKS
1 - 1	*5760549700	Cover, Top (V-900X, V-800X)	
	5760549600	Cover, Top (V-700)	
1 - 2	*5760551000	Bracket, Mechanism; L	
1 - 3	*5760551100	Bracket, Mechanism; R	
1 - 4	*5760552300	Plate, Contact	
1 - 5	5760573500	Cover Assy, Cassette (V-900X)	
	5760566900	Cover Assy, Cassette (V-800X)	
	5760575200	Cover Assy, Cassette (V-700)	
1 - 6	5760546800	Frame, Cassette	
1 - 7	5760546700	Window, Cassette; B (V-900X, V-800X)	
	5760546600	Window, Cassette; A (V-700)	
1 - 8	5760546200	Crip, Window; L	
1 - 9	5760546300	Crip, Window; R	
1 -10	*5760556600	Cushion, PCB	
1 -11	*5760551300	Foot	
1 -12	*5760550600	Cover, Bottom	
1-13	*5760576100	Spacer, Mechanism Chassis	

Parts marked with * require longer delivery time.

EXPLODED VIEW-2

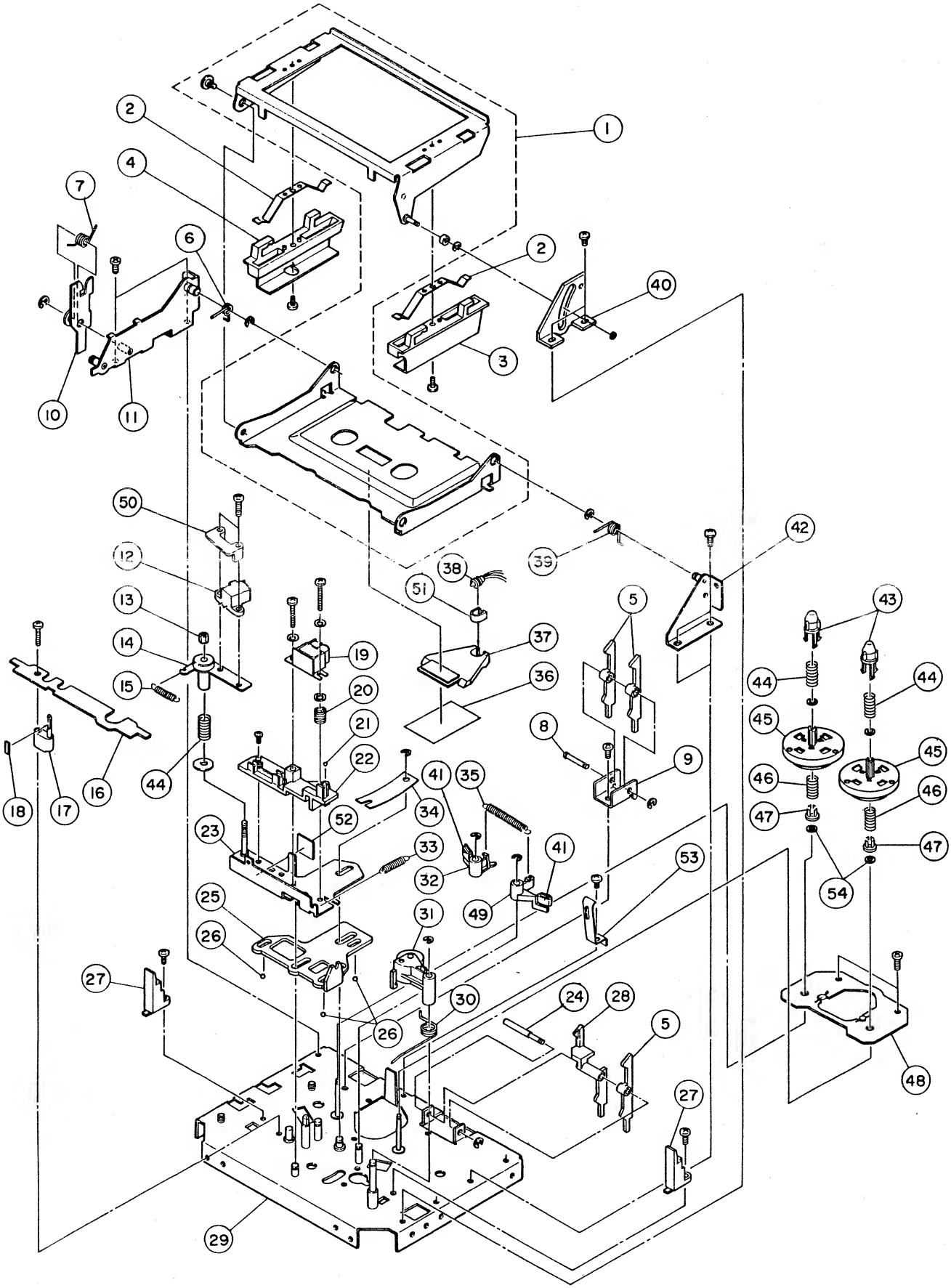

REF. NO.	PARTS NO.	DESCRIPTION	COMMON MODELS	REMARKS
2 - 1	*5800531100	Holder Assy, Cassette		
2 - 2	5800455200	Spring, Cassette Pressure	Z-5000	
2 - 3	5800122100	Holder, R	V-9	
2 - 4	5800109600	Holder, L	V-9	
2 - 5	*5800530800	Arm, Sensor; A		
2 - 6	5800115500	Spring, Holder; L	V-9	
2 - 7	5800448200	Spring, Lock	Z-5000	
2 - 8	*5800529600	Shaft, Arm; L		
2 - 9	*5800530700	Bracket, Sensor Arm		
2 -10	*5800530500	Arm, Lock; B		
2 -11	*5800441400	Bracket Assy, Holder; L	Z-5000	
2 -12	5569613000	Head, Erase	C-3	
2 -13	*5781953000	Nut, M3		
2 -14	*5800234601	Bracket Assy, Erase Head	V-1RX	
2 -15	5800519001	Spring, Erase Head	Z-5000	
2 -16	*5800237801	Cover, Head; B	V-1RX	
2 -17	5800235100	Holder, Pad	V-80	
2 -18	5800235201	Pad, Head	V-80	
2 -19	5378902700	Head, R/P (V-900X)		
	5378901300	Head, R/P (V-800X, V-700)	V-1RX	
2 -20	5800114700	Spring, Head	V-9	
2 -21	5540055000	Ball, Steel; ϕ2	A-450	
2 -22	*5800238302	Holder, Head; B	V-70C	
2 -23	*5800442400	Plate Sub-assy, Head Base	Z-5000	
2 -24	*5800529700	Shaft, Sensor Arm; R		
2 -25	*5800122802	Plate, Slider	V-9	
2 -26	5540056000	Ball, Steel; ϕ3	A-450	
2 -27	*5800117400	Guide, Cassette	V-9	
2 -28	*5800530900	Arm, Sensor; B		
2 -29	*5800531000	Chassis Assy, Mechanism		
2 -30	5800461802	Spring, Pinch Roller Arm (V-900X)	Z-5000	
	5800556501	Spring, Pinch Roller Arm; B (V-800X, V-700)		
2 -31	5800239002	Arm Assy, Pinch Roller; B	V-1RX	
2 -32	*5800439601	Arm, Brake; L	Z-5000	
2 -33	5800455100	Spring, Base Arm	Z-5000	
2 -34	*5800235700	Spring, Head Base Pressure; B	V-1RX	
2 -35	5800445800	Spring, Brake	Z-5000	
2 -36	*5800452700	Paper, Reflector	Z-5000	
2 -37	*5800441801	Lens, Cassette	Z-5000	
2 -38	5310006500	Lamp, DC12V		
2 -39	5800115600	Spring, Holder; R	V-9	
2 -40	*5800442201	Bracket, Holder Guide; B	Z-5000	
2 -41	*5800439800	Shoe, Brake	Z-5000	
2 -42	*5800441300	Bracket Assy, Holder; R	Z-5000	
2 -43	5800236501	Ring, Drive	V-70C	
2 -44	5800231300	Spring, Reel	V-70C	
2 -45	5800530200	Table Assy, Reel		
2 -46	5800481901	Spring, Back Tension	Z-5000	
2 -47	5800231500	Holder, Spring	V-70C	
2 -48	*5200107700	PCB Assy, SENSOR	Z-5000	
	5228008300	Photo Transistor, PH-102K		
2 -49	*5800439701	Arm, Brake; R	Z-5000	
2 -50	*5800468400	Cover, Erase Head	Z-5000	
2 -51	*5800423302	Filter	Z-6000	
2 -52	*5800520000	Stopper, Erase Head; B	Z-5000	
2 -53	*5800115002	Spring, Cassette Pressure	V-9	
2 -54	5800539800	Washer, Teflon; ϕ1.7 x ϕ4 x t0.3		

Parts marked with * require longer delivery time.

EXPLODED VIEW-3 (V-900X)

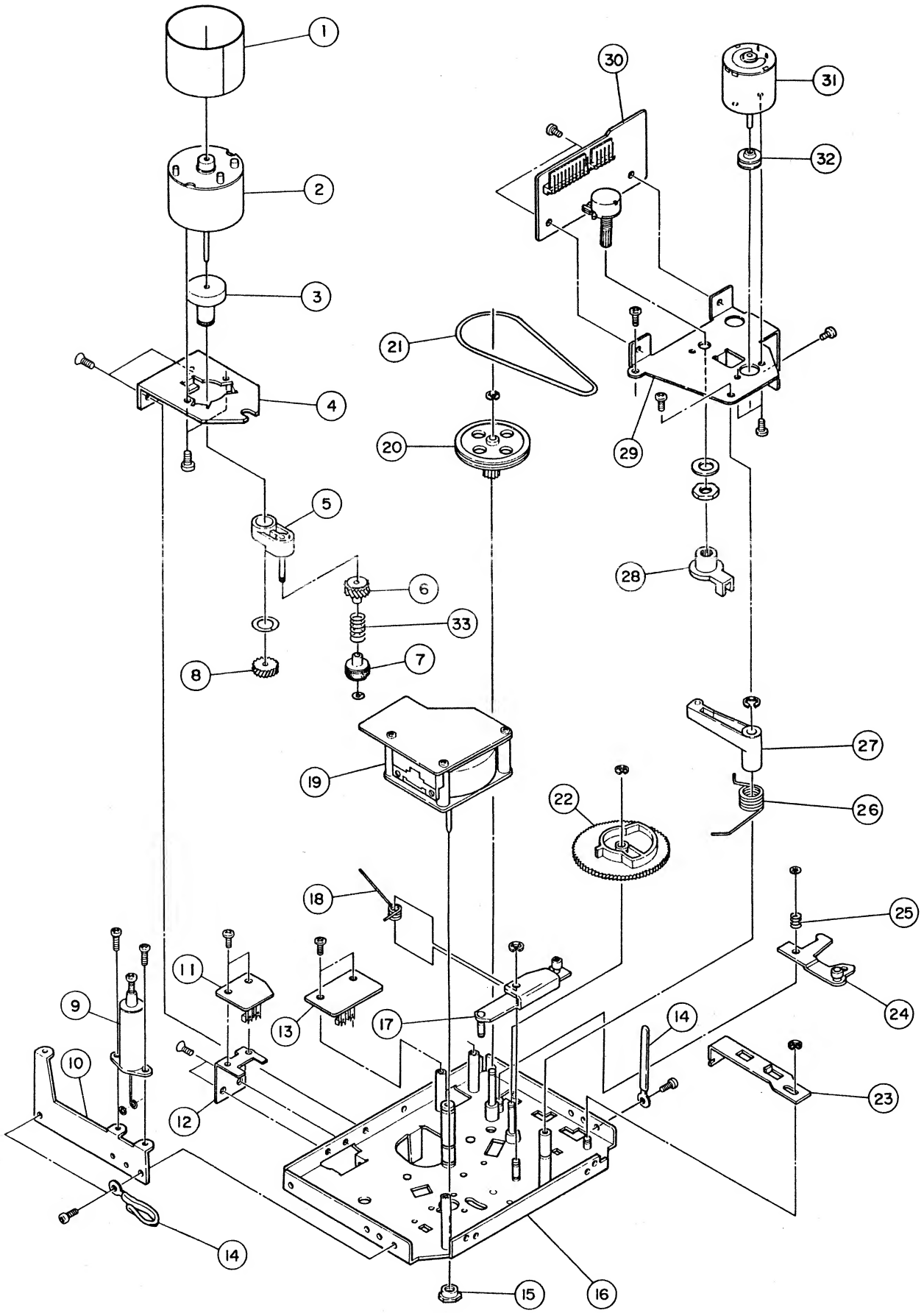

REF. NO.	PARTS NO.	DESCRIPTION	COMMON MODELS	REMARKS
3 - 1	*5800235900	Plate, Shield	V-1RX	
3 - 2	5370002502	Motor, Reel; DC	V-70C	
3 - 3	5800461700	Shaft, Pulley Arm	Z-5000	
3 - 4	*5800430001	Plate, Reel Motor	V-66C	
3 - 5	5800461500	Arm Assy, Pulley	V-70C	
3 - 6	5800461600	Pulley Assy, Gear; B	V-70C	
3 - 7	5800430302	Pulley Assy	V-70C	
3 - 8	5800232500	Pulley, Gear; A	V-70C	
3 - 9	5800131802	Damper Assy	V-9	
3 -10	*5800441001	Bracket, Damper	Z-5000	
3 -11	*5200132500	PCB Assy, SWITCH; R		
3 -12	*5800530600	Bracket, PCB		
3 -13	*5200132400	PCB Assy, SWITCH; L		
3 -14	*5581038000	Clamper, Cord; A		
3 -15	*5800239200	Nut, Motor	V-1RX	
3 -16	*5800531000	Chassis Assy, Mechanism		
3 -17	*5800532800	Arm Assy, Head Base		
3 -18	*5800530101	Spring, Base Return; B		
3 -19	5370002303	Motor Assy, Capstan; DC	V-1RX	
3 -20	5800117200	Pulley, Speed Reduction	V-9	
3 -21	5800419200	Belt, Pulley	Z-6000	
3 -22	5800428901	Cam, Control	Z-6000	
3 -23	*5800440901	Lever, Eject	Z-5000	
3 -24	*5800439901	Arm Assy, Eject	Z-5000	
3 -25	5800446000	Spring, Eject Arm	Z-5000	
3 -26	5800453700	Spring, Balance Arm	Z-5000	
3 -27	*5800418900	Arm Assy, Balance	Z-6000	
3 -28	*5800418800	Joint	Z-6000	
3 -29	*5800531400	Bracket, Motor; B		
3 -30	*5200132600	PCB Assy, MECHANISM		
3 -31	5370001400	Motor, Control; DC	V-9	
3 -32	5800123300	Pulley, V	V-9	
3 -33	5800430200	Spring, Pulley	V-70C	

Parts marked with * require longer delivery time.

EXPLODED VIEW-4 (V-800X/V-700)

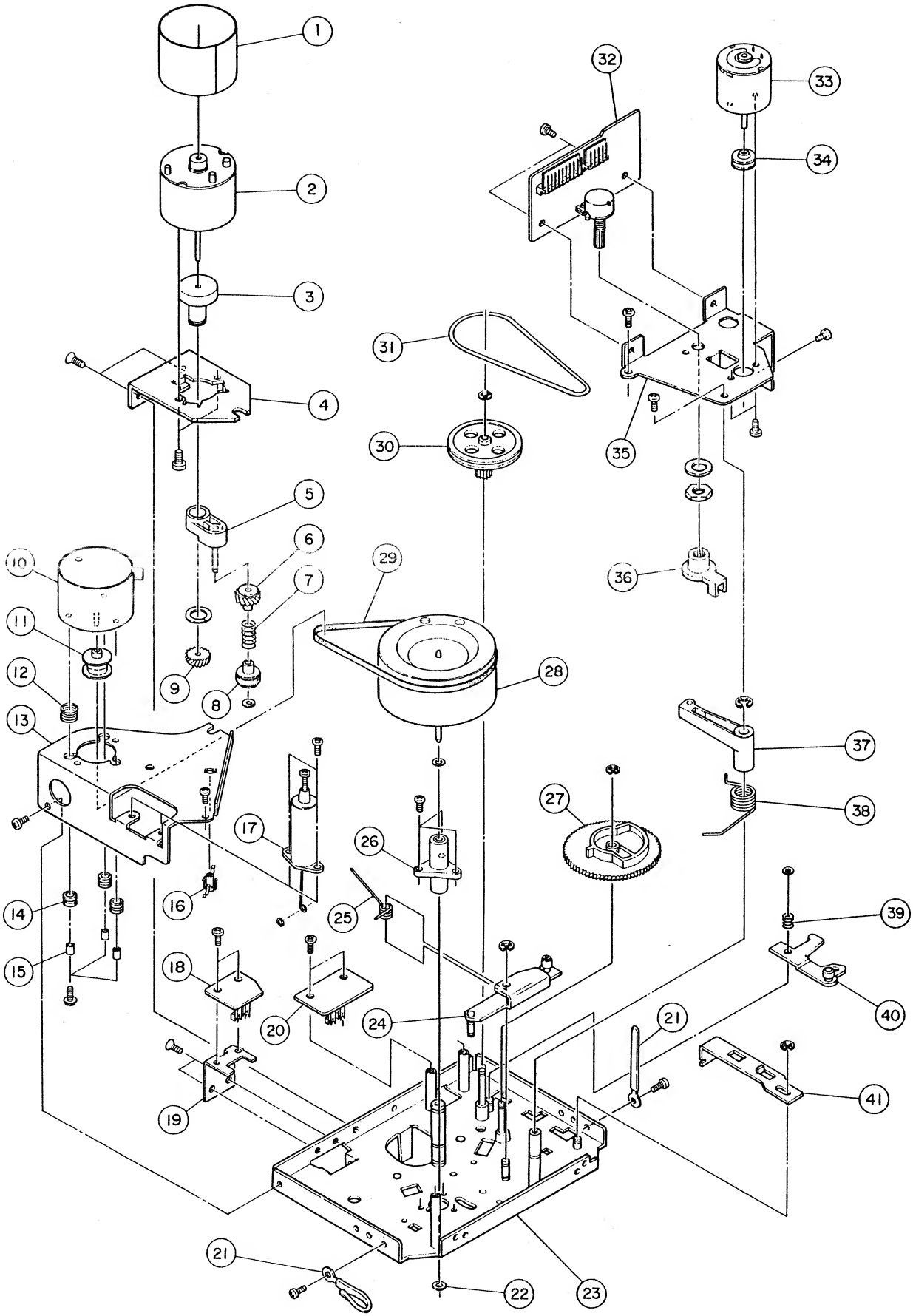

REF. NO.	PARTS NO.	DESCRIPTION	COMMON MODELS	REMARKS
4 - 1	*5800235900	Plate, Shield	V-1RX	
4 - 2	5370002502	Motor, Reel; DC	V-70C	
4 - 3	5800461700	Shaft, Pulley Arm	Z-5000	
4 - 4	*5800430001	Plate, Reel Motor	V-66C	
4 - 5	5800461500	Arm Assy, Pulley	V-70C	
4 - 6	5800461600	Pulley Assy, Gear; B	V-70C	
4 - 7	5800430200	Spring, Pulley	V-70C	
4 - 8	5800430302	Pulley Assy	V-70C	
4 - 9	5800232500	Pulley, Gear; A	V-70C	
4 -10	5370004200	Motor, Capstan; DC		
4 -11	5800232200	Pulley, Motor	V-70C	
4 -12	5800469800	Spring, Motor Earth	V-909RX	
4 -13	*5800531500	Bracket, Capstan Flywheel		
4 -14	*5534537000	Cushion, Rubber	A-206	
4 -15	*5785602650	Spacer, Cushion; ϕ2.6 x t5		
4 -16	*5800236900	Bearing, Thrust	V-70C	
4 -17	5800131802	Damper Assy	V-9	
4 -18	*5200132500	PCB Assy, SWITCH; R		
4 -19	*5800530600	Bracket, PCB		
4 -20	*5200132400	PCB Assy, SWITCH; L		
4 -21	*5581038000	Clamper, Cord; A		
4 -22	5534130000	Cap, Oil Retainer	A-400	
4 -23	*5800531000	Chassis Assy, Mechanism		
4 -24	*5800532800	Arm Assy, Head Base		
4 -25	5800530101	Spring, Base Return; B		
4 -26	5800238800	Housing Assy, Capstan Flywheel	V-70C	
4 -27	5800428901	Cam, Control		
4 -28	5800556600	Flywheel Assy, Capstan		
4 -29	5800106900	Belt, Capstan Drive	V-9	
4 -30	5800117200	Pulley, Speed Reduction	V-9	
4 -31	5800419200	Belt, Pulley	Z-6000	
4 -32	*5200132600	PCB Assy, Mechanism		
4 -33	5370001400	Motor, Control	V-9	
4 -34	5800123300	Pulley, Motor	V-9	
4 -35	*5800531400	Bracket, Motor; B		
4 -36	*5800418800	Joint	Z-6000	
4 -37	*5800418900	Arm Assy, Balance	Z-6000	
4 -38	5800453700	Spring, Balance Arm	Z-5000	
4 -39	5800446000	Spring, Eject Arm	Z-5000	
4 -40	*5800439901	Arm Assy, Eject	Z-5000	
4 -41	*5800440901	Lever, Eject	Z-5000	

Parts marked with * require longer delivery time.

EXPLODED VIEW-5

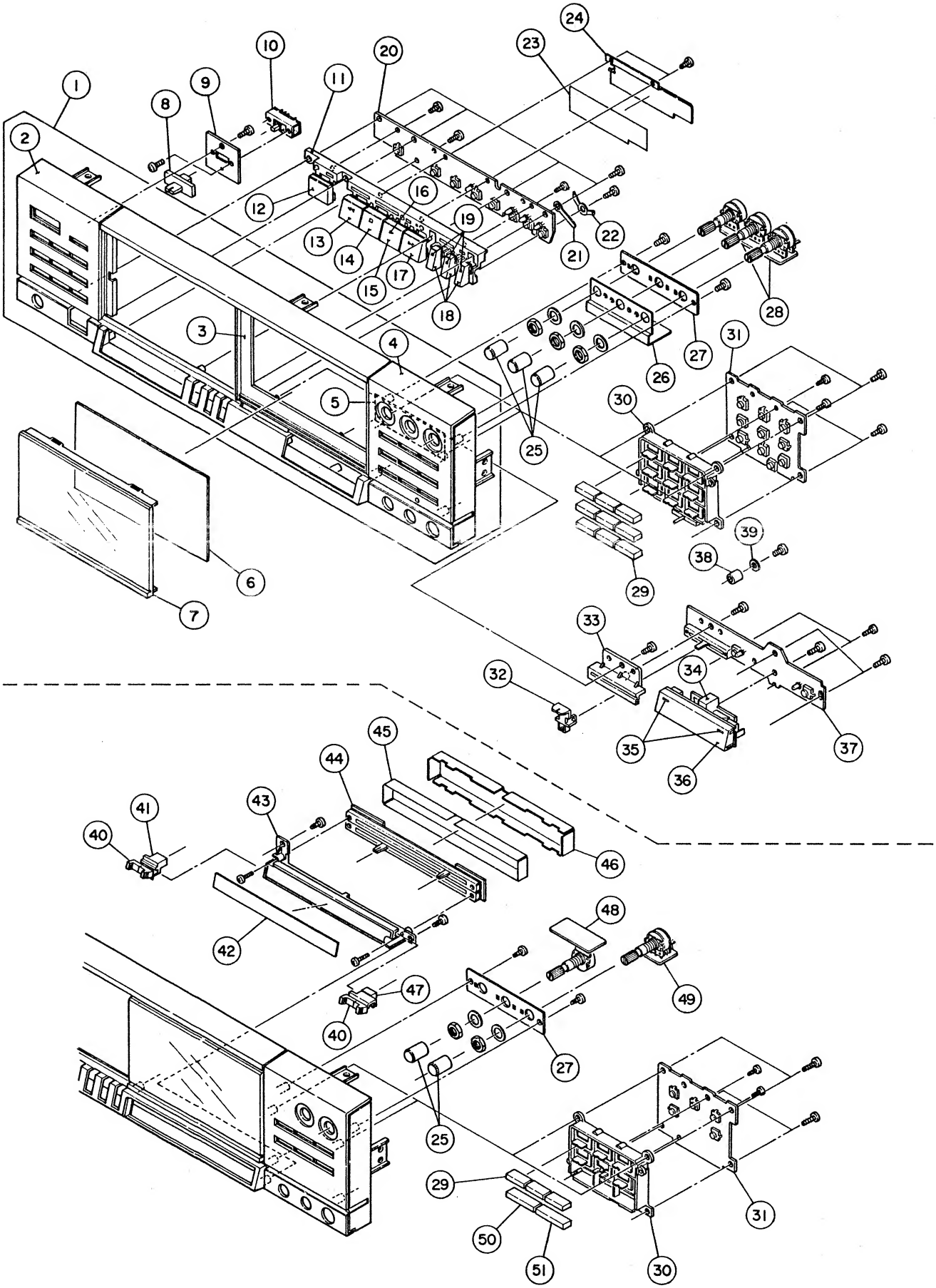

REF. NO.	PARTS NO.	DESCRIPTION		REMARKS
5 - 1	*5760577500	Panel Assy, Front	(V-900X)	
	*5760577600	Panel Assy, Front	(V-800X)	
	*5760577700	Panel Assy, Front	(V-700)	
5 - 2	*5760548000	Escutcheon, CL	(V-900X)	
	*5760549900	Escutcheon, BL	(V-800X)	
	*5760549800	Escutcheon, AL	(V-700)	
5 - 3	*5760550000	Flame, Front; C	(V-900X)	
	*5760549900	Flame, Front; B	(V-800X)	
	*5760549800	Frame, Front; A	(V-700)	
5 - 4	*5760548300	Escutcheon, CR	(V-900X)	
	*5760548200	Escutcheon, BR	(V-800X)	
	*5760548100	Escutcheon, AR	(V-700)	
5 - 5	*5760550300	Scale, VR C	(V-900X)	
	*5760550200	Scale, VR B	(V-800X)	
	*5760550100	Scale, VR A	(V-700)	
5 - 6	*5760547700	Filter, FL B	(V-900X)	
	*5760547600	Filter, FL A	(V-800X, V-700)	
5 - 7	5760547500	Window, FL C	(V-900X)	
	5760547400	Window, FL B	(V-800X)	
	5760547300	Window, FL A	(V-700)	
5 - 8	5760543100	Knob, Timer	(V-900X, V-800X)	
5 - 9	*5760543200	Bracket, Timer	(V-900X, V-800X)	
5 -10	5760567100	Switch, Slide	(V-900X, V-800X)	
5 -11	*5760549300	Frame, Button AB	(V-900X, V-800X)	
	*5760549200	Frame, Button AA	(V-700)	
5 -12	5760543600	Button, EJECT B	(V-900X, V-800X)	
	5760543500	Button, EJECT C	(V-700)	
5 -13	5760543800	Button, REWIND B	(V-900X, V-800X)	
	5760543700	Button, REWIND A	(V-700)	
5 -14	5760544000	Button, STOP B	(V-900X, V-800X)	
	5760543900	Button, STOP A	(V-700)	
5 -15	5760544200	Button, PLAY B	(V-900X, V-800X)	
	5760544100	Button, PLAY A	(V-700)	
5 -16	5760544300	Lens, Insert A		
5 -17	5760544500	Button, FF B	(V-900X, V-800X)	
	5760544400	Button, FF A	(V-700)	
5 -18	5760544700	Button, REC B	(V-900X, V-800X)	
	5760544600	Button, REC A	(V-700)	
5 -19	5760544800	Lens, Insert B		
5 -20	*5760567500	PCB Assy, KEY SW 1		
5 -21	*5760578000	Clamper		
5 -22	*5760552200	Contact Plate, TR NSP		
5 -23	*5760569200	Barrier, TR SP SW		
5 -24	*5760569100	Shield, TR NSP SW		
5 -25	5760546100	Knob, VR B	(V-900X, V-800X)	
	5760546000	Knob, VR A	(V-700)	
5 -26	*5760573600	Shield, REC LEV.	(V-900X)	
5 -27	*5760548400	Bracket, VR		
5 -28	*5760567200	PCB Assy, VR 1		
	*5760567300	PCB Assy, VR 2		
5 -29	5760545200	Button, MB	(V-900X, V-800X)	
	5760545100	Button, MA	(V-700)	
5 -30	*5760549500	Frame, Button C		
5 -31	*5760567410	PCB Assy, KEY SW 2	(V-900X)	
	*5760567400	PCB Assy, KEY SW 2	(V-800X, V-700)	
5 -32	5760545700	Knob, Fade Time	(V-900X)	
5 -33	*5760548500	Guide, VR S	(V-900X)	
5 -34	*5760549400	Frame, Button B	(V-900X)	
5 -35	5760545000	Lens, Insert C	(V-900X)	
5 -36	5760544900	Button, FADE	(V-900X)	
5 -37	*5760573700	PCB Assy, VR 4	(V-900X)	
5 -38	*5760573800	Spacer	(V-900X)	
5 -39	*5760566800	Washer	(V-900X)	

(Continued on page 14)

Parts marked with * require longer delivery time.

EXPLODED VIEW-6

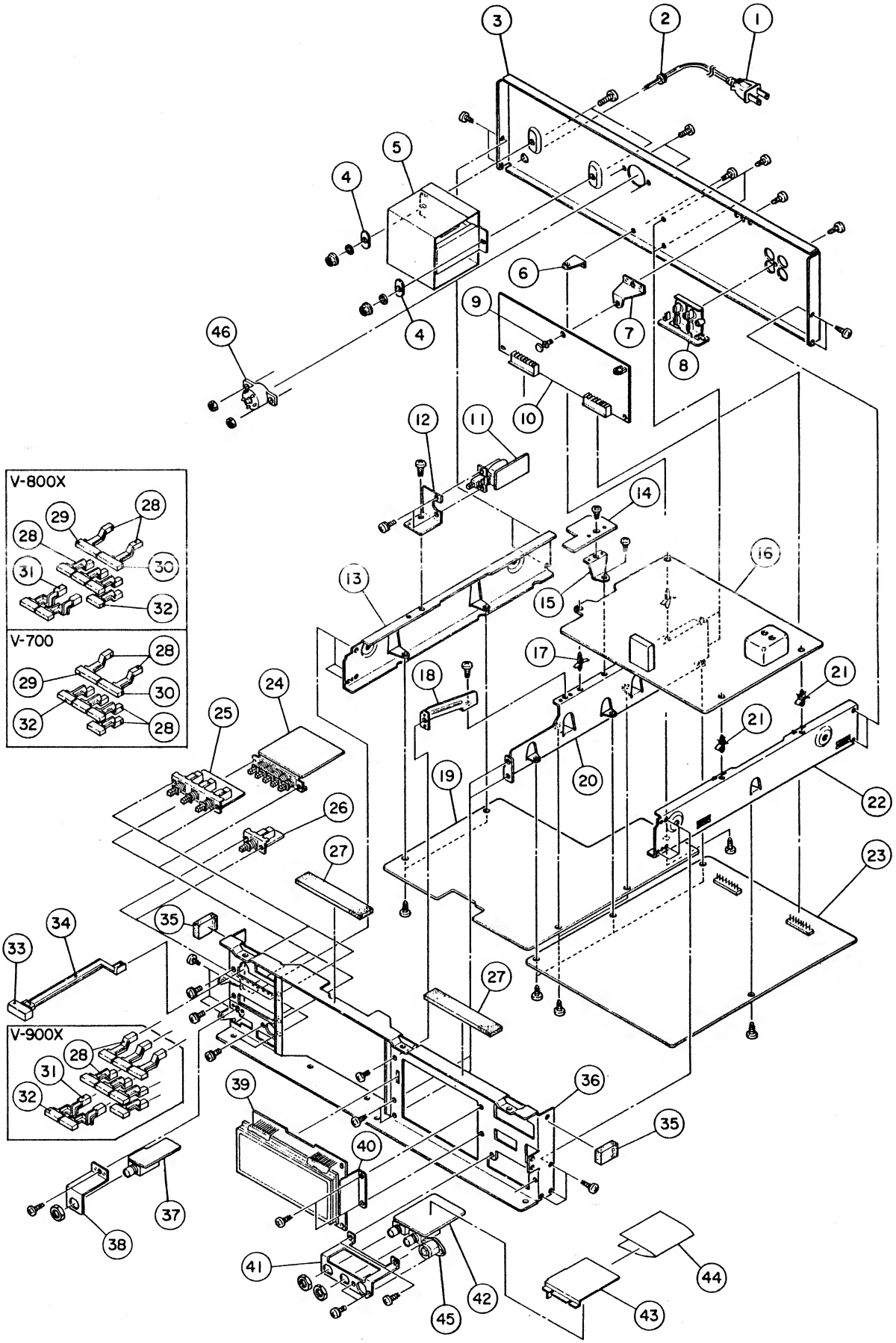

REF. NO.	PARTS NO.	DESCRIPTION	REMARKS
6 - 1	*5760555600	Cord Assy, AC Power [J]	
	*5760555700	Cord Assy, AC Power [US, C, GE]	
	*5760555800	Cord Assy, AC Power [E]	
	*5760555900	Cord Assy, AC Power [UK]	
	*5760556000	Cord Assy, AC Power [A]	
6 - 2	*5760556100	Bushing, Cord [J, US, C, GE]	
	*5760556200	Bushing, Cord [E, UK, A]	
6 - 3	*5760550700	Panel, Rear [J, US, C]	
	*5760550800	Panel, Rear [GE]	
	*5760555400	Panel, Rear [E, UK, A]	
6 - 4	*5760552100	Plate	
6 - 5	5760555500	Transformer, Power [J]	
	5760555510	Transformer, Power [US, C]	
	5760555520	Transformer, Power [GE]	
	5760555530	Transformer, Power [E, UK, A]	
6 - 6	*5760551200	Bracket, PCB	
6 - 7	*5760551400	Bracket, DBX PCB (V-900X, V-800X)	
6 - 8	*5760556400	PCB Assy, IN/OUTPUT	
6 - 9	*		
6 -10	*5760554400	PCB Assy, DBX (V-900X, V-800X)	
6 -11	*5760556500	PCB Assy, POWER SW [J, US, C]	
	*5760556510	PCB Assy, POWER SW [GE, E, UK, A]	
6 -12	*5760553100	Bracket, Power SW	
6 -13	*5760550400	Bracket, Side; L	
6 -14	*	PCB Assy, TR 3 (V-900X)	
	*	PCB Assy, TR 3 (V-800X)	
	*	PCB Assy, TR 3 (V-700)	
6 -15	*5760551400	Bracket, DBX PCB	
6 -16	*5760571600	PCB Assy, AUTO CAL (V-900X)	
	*5760576500	PCB Assy, TR 4 (V-900X)	
6 -17	*5760571700	Support, PCB (V-900X)	
6 -18	*5760551900	Bracket, MECH	
6 -19	*5760554320	PCB Assy, POWER/CONTROL (V-900X) [J, US, C, GE, A]	
	*5760554330	PCB Assy, POWER/CONTROL (V-900X) [E, UK]	
	*5760554300	PCB Assy, POWER/CONTROL (V-800X) [J, US, C, GE, A]	
	*5760554310	PCB Assy, POWER/CONTROL (V-800X) [E, UK]	
	*5760554340	PCB Assy, POWER/CONTROL (V-700) [J, US, C, GE, A]	
	*5760554350	PCB Assy, POWER/CONTROL (V-700) [E, UK]	
6 -20	*5760551800	Bracket, Center	
6 -21	*5760571800	Support, PCB (V-900X)	
6 -22	*5760550500	Bracket, Side; R	
6 -23	*5760554210	PCB Assy, R/P (V-900X)	
	*5760554200	PCB Assy, R/P (V-800X)	
	*5760554220	PCB Assy, R/P (V-700)	
6 -24	*5760554600	PCB Assy, NR SW (V-900X, V-800X)	
	*5760554610	PCB Assy, NR SW (V-700)	
6 -25	*5760554510	PCB Assy, MONITOR SW (V-900X)	
	*5760554500	PCB Assy, MONITOR SW (V-800X, V-700)	
6 -26	*5760554700	PCB Assy, MPX SW	
6 -27	*5760552500	Spacer, Top Cover	
6 -28	*5760549000	Joint, A	
6 -29	5760545400	Button, NB L (V-800X)	
	5760545300	Button, NA L (V-700)	
6 -30	5760545600	Button, NB R (V-800X)	
	5760545500	Button, NA R (V-700)	
6 -31	5760549100	Joint, B (V-900X, V-800X)	
6 -32	5760545200	Button, MB (V-900X, V-800X)	
	5760545100	Button, MA (V-700)	
6 -33	5760543400	Button, Power B (V-900X, V-800X)	
	5760543300	Button, Power A (V-700)	

(Cotinued on page 14)

Parts marked with * require longer delivery time.

[US]: U.S.A. [C]: CANADA [GE]: GENERAL EXPORT [E]: EUROPE [UD]: U.K.
[A]: AUSTRALIA [J]: JAPAN

(Continued from page 11)

EXPLODED VIEW-5

REF. NO.	PARTS NO.	DESCRIPTION		REMARKS
5 -40	5760545900	Knob, REC VR B	(V-800X)	
	5760545800	Knob, REC VR A	(V-700)	
5 -41	5760548900	Joint, VR RB	(V-800X)	
	5760548800	Joint, VR RA	(V-700)	
5 -42	*5760547000	Plate, REC VR B	(V-800X)	
	*5760546900	Plate, REC VR A	(V-700)	
5 -43	*5760547200	Guide, VR MB	(V-800X)	
	*5760547100	Guide, VR MA	(V-700)	
5 -44	*5760567600	PCB Assy, VR 3		
5 -45	*5760569700	Barrier	(V-800X, V-700)	
5 -46	*5760569600	Shield, Slide VR	(V-800X, V-700)	
5 -47	5760548700	Joint, VR LB	(V-800X)	
	5760548600	Joint, VR LA	(V-700)	
5 -48	*5760567300	PCB Assy, VR 2		
5 -49	*5760567200	PCB Assy, VR 1		
5 -50	5760545400	Button, NB L	(V-800X)	
	5760545300	Button, NA L	(V-700)	
5 -51	5760545600	Button, NB R	(V-800X)	
	5760545500	Button, NA R	(V-700)	

Parts marked with * require longer delivery time.

(Continued from page 13)

EXPLODED VIEW-6

REF. NO.	PARTS NO.	DESCRIPTION	REMARKS
6 -34	*5760552100	Shaft, L (V-900X)	
	*5760552000	Shaft, L (V-800X, V-700)	
6 -35	*5760567000	Spacer, Front	
6 -36	*5760550900	Panel, Front	
6 -37	*5760554900	PCB Assy, PHONES	
6 -38	*5760551500	Bracket, PHONES Jack	
6 -39	*5760554810	PCB Assy, FL (V-900X)	
	*5760554800	PCB Assy, FL (V-800X)	
	*5760554820	PCB Assy, FL (V-700)	
6 -40	*5760551600	Bracket, FL	
6 -41	*5760551700	Bracket, MIC Jack	
6 -42	*5760555000	PCB Assy, MIC AMPL.	
6 -43	*5760552600	Shield, MIC J	Part of 6-42
6 -44	*5760552700	Barrier, MIC J	Part of 6-42
6 -45	5760555100	Jack, Remote (V-900X, V-800X)	
6 -46	5760556300	Switch, Voltag Selector [GE]	

Parts marked with * require longer delivery time.

[US]: U.S.A. [C]: CANADA [GE]: GENERAL EXPORT [E]: EUROPE [UK]: U.K.
[A]: AUSTRALIA [J]: JAPAN

Electronic Components

Parts No.	Description
57605570-00	Push Switch [V-800X,V-700]
57605571-00	Push Switch [V-900X]
51450910-00	Transistor 2SC945AK
52240150-20	Diode 1SS133T
57605582-00	Display Tube
57605583-00	IC TA7318P-2
57605584-00	IC MSL9359RS
57605585-00	IC MSL912RS
50425530-00	Transistor 2SA733P
52245403-01	Diode RD5.1EB2
52204173-00	IC M5219L
53000319-00	Push Switch
57605637-00	L.P. Filter
57605638-00	Bias Trap Coil
57605639-00	Peaking Coil 22mH
57605640-00	Choke Coil 8.2mH
57605641-00	Peaking Coil
57605642-00	Bias OSC Block
51502330-00	R., Trimmer 20k(B)
51500943-00	R., Trimmer 50k(B)
51501530-00	R., Trimmer 5k(B)
57605643-00	IC M5220L
52204162-00	IC M5218L
50427380-00	IC NJM4558D
57605645-00	IC HA12058
52307750-00	Transistor 2SC2878B
52320072-00	FET 2SK364BL
50424750-00	Transistor 2SC1384Q
52245431-01	Diode RD12EB2
57605652-00	Diode SR1K4LF
52280050-00	Diode W02
52245434-01	Diode RD13EB2
52245409-01	Diode RD6.2EB2
52245397-01	Diode RD4.3EB2
52245466-01	Diode RD33EB2
52245450-01	Diode RD22EB2
52245389-01	Diode RD3.0EB2
51450870-00	Transistor 2SD313E
50426250-00	Transistor 2SC1318S
51450430-00	Transistor 2SA720Q
57605660-00	Semi-Fixed VR 10k(B)
52204155-00	IC NJM7812A
52204138-00	IC NJM7912A
52204180-00	IC LA2000
52204185-00	IC M54545L
52322505-00	IC M54560P
57605661-00	IC MB8841H-1248
57605662-00	IC HD48801B56
57605663-00	IC BA618
53470010-00	Ceramic OSC KBR4.0M
53470011-00	Ceramic OSC KBR-400B
50411380-00	Fuse T500mA [E,UK]
51421880-00	Fuse T1.6A [E,UK]
52204145-01	IC UPC1252H2
52204146-01	IC UPC1253H2
51501560-00	R., Trimmer 50k(B)
51501540-00	R., Trimmer 10k(B)
57605678-00	VR 10k(A)x2
57605680-00	VR V16L4 100kCC [V-800X,V-700]
57605681-00	VR V16L4 100k [V-900X]
57605685-00	Key Switch
57605689-00	LED SLR34VR5F
57605690-00	LED SLR34MG5F
52840065-00	Slide VR 100k(A)x2
52245406-01	Diode RD5.6EB2
52245395-01	Diode RD3.9EB2
57605725-00	Choke Coil 3.6mH
57605726-00	OSC Block

Parts No.	Description
51500960-00	R., Trimmer 100k(B)
50534460-00	R., Trimmer 1k(B)
51500940-00	R., Trimmer 50k(B)
51500970-00	R., Trimmer 5k(B)
57605727-00	IC TC9153
57605728-00	IC HA12035
57605729-00	IC HD44801B58
57605730-00	IC TC4053BP
57605731-00	Thermistor 10k
57605573-00	Push Switch
57605574-00	Push Switch
57605580-00	Push Switch
57605742-00	Slide VR 200k(B) [V-900X]
52204178-00	IC LM556CN
52280083-00	Photo Interrupter
52800033-02	R., Trimmer VR
52800036-02	R., Trimmer VR
52820108-00	VR
52860067-00	Choke Coil 1.2mH
53017531-00	Leef Switch

Owner's Manuals

Parts No.	Description
57000536-00	Owner's Manual V-900X DM
57000537-00	Owner's Manual V-900X Multi
57000538-00	Owner's Manual V-800X DM
57000539-00	Owner's Manual V-800X/V-700 Multi
57000540-00	Owner's Manual V-700 DM

TEAC®

ティアック株式会社

	本社 営業部	180・東京都武蔵野市中町3－7－3	電話 武蔵野 (0422) 53-1111(代)
製品についてのお問合わせ サービスに関するお問合わせ	札幌営業所	064・札幌市中央区南7条西2－2 くぼたビル	電話 札幌 (011)521-4101(代)
	仙台営業所	980・仙台市1番町2－5－5 中央ビル	電話 仙台 (0222) 27-1501(代)
	大宮営業所	330・大宮市桜木町4－2 ローズベイ大宮ビル	電話 大宮 (0486) 42-4551(代)
	東京営業所	100・東京都千代田区永田町2－10－7 星ガ岡会館	電話 東京 (03)592-1831(代)
	千代田営業所	100・東京都千代田区永田町2－10－7 星ガ岡会館	電話 東京 (03)592-1836(代)
	千葉出張所	280・千葉市松波1－11－3 石橋松波ビル	電話 千葉 (0472) 55-1281(代)
	立川営業所	190・東京都立川市栄町4－13－2	電話 立川 (0425) 25-4721(代)
	横浜営業所	221・横浜市神奈川区沢渡1－1 高島台第一ビル	電話 横浜 (045)312-3270(代)
	名古屋営業所	464・名古屋市千種区東山通り3－2－3	電話 名古屋 (052)782-4581(代)
	静岡出張所	420・静岡市中島大割286－1	電話 静岡 (0542) 81-6561(代)
	大阪営業所	564・大阪府吹田市垂水町3－34－10	電話 大阪 (06)384-5201(代)
	京都出張所	600・京都市下京区大宮通四条下ル四条大宮町21番地 三虎ビル	電話 京都 (075)842-0751(代)
	神戸出張所	650・神戸市中央区山本通り3－1－3 谷口マンション内	電話 神戸 (078)242-2458(代)
	岡山出張所	700・岡山市十日市中町1番40号	電話 岡山 (0862) 25-8601(代)
	広島営業所	733・広島市中区中島町10－24	電話 広島 (082)243-3581(代)
	福岡営業所	812・福岡市博多区博多駅東2－17－5 モリメンビル	電話 福岡 (092)431-5781(代)
サービスに関するお問合わせ	本社サービス1課	180・東京都武蔵野市中町3－7－3	電話 武蔵野 (0422) 53-3242(代)
	沖縄サービスセンター	901-22・沖縄県宜野湾市字喜友名229	電話 沖縄 (09889) 2-2020(代)
技術的なお問合わせ	テープデッキ相談室	180・東京都武蔵野市中町3－7－3	電話 武蔵野 (0422) 53-9213(代)

TEAC CORPORATION

3-7-3 NAKA-CHO MUSASHINO TOKYO PHONE (0422) 53-1111

TEAC CORPORATION OF AMERICA — 7733 TELEGRAPH ROAD MONTEBELLO CALIFORNIA 90640 PHONE (213) 726-0303

TEAC AUSTRALIA PTY., LTD. — 115 WHITEMAN STREET SOUTH MELBOURNE VICTORIA 3205 PHONE 699-6000

Printed in Japan

SCHEMATIC DIAGRAMS

V-900X/V-800X/V-700

INSTRUCTIONS FOR SERVICE PERSONNEL

BEFORE RETURNING APPLIANCE TO THE CUSTOMER, MAKE LEAKAGE-CURRENT OR RESISTANCE MEASUREMENTS TO DETERMINE THAT EXPOSED PARTS ARE ACCEPTABLY INSULATED FROM THE SUPPLY CIRCUIT.

NOTES

1. Resistor values are in ohms (k=kilo-ohms, M=megohms).
2. Capacitor values are in microfarads (p=picofarads).
3. Voltage and signal level values are for reference only.
   0dB=0.775V
4. ▭ : Front panel indication
5. ⬚ : Rear panel indication
6. ——— : +B power supply circuit
7. ——— : −B power supply circuit
8. ⚠Parts marked with this sign are safety critical components. They must always be replaced with identical components-refer to the appropriate parts list and ensure exact replacement.

注意

1. 抵抗の単位はΩ(k＝kΩ, M＝MΩ)です
2. コンデンサの単位はμF(p＝pF)です.
3. 電圧及び信号レベルは参考値です.
   0dB＝0.775V
4. ▭ : フロント・パネル上の表示
5. ⬚ : リア・パネル上の表示
6. ——— : +B電源回路
7. ——— : −B電源回路
8. ⚠マークのある部品は安全重要部品です.
   交換するときは必ずティアック指定の部品を使用してください.

チップ部品について

本ステレオ・カセット・デッキには，チップ部品を用いてオーディオ製品に於いて，かつては不可能だった回路の小型化を実現しました．チップ部品はサービス上特別な扱いが必要です．下記の内容をよくお読みいただき，本カセット・デッキを修理して下さい．

チップ部品の種類

カセット・デッキに使用されるチップ部品はどれも同じような大きさ，形状ですが，次の２種類に分けられます．

チップ抵抗

抵抗値を示す３桁の数字を持っています．最初の２桁は抵抗の有効数値を示します．３番目の桁すなわち乗数は最初の２桁に続く零の数を示します．下の例を参照して下さい．

部品上の数字		抵抗値
470	=	47 ohms
471	=	470 ohms
472	=	4.7 kohms
473	=	47 kohms

チップ・トランジスタ

２文字のコードによって分類されます．サービスに際しての本部品の詳しい情報は回路図，部品表，部品配置図を参照して下さい．

文字コード	品番	品名
ZQ,ZR or ZS	5760558600	2SD601D

チップ部品の取りはずし／交換

チップ部品はセラミック及びプラスチックのモールドで，衝撃には弱い構造です．又，チップ部品は耐熱性ではないのでハンダづけする時：

（A）チップ部品をプリント基板上に平らにセットして下さい．

（B）時々，片方の端子がハンダづけされると，他のハンダづけされていない端子は若干上りますが，下へ押さないで下さい．又，チップ部品の周囲に必要以上に，長く熱を加えたり，ハンダをつけることはショートを引き起す場合があります．チップ部品は正しく取付けをして下さい．

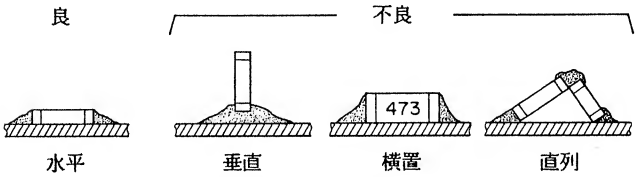

チップ部品を取りはずす場合，下図のようにその端子へ熱を２，３回繰りかえし与えてからスライドさせて下さい．

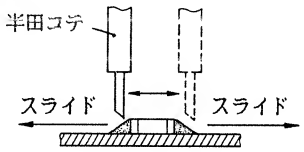

取りはずし後，プリント基板上に損傷がないか確認して下さい．チップ部品の交換の時は，ピンセットを用いてチップ部品を必要とする個所へ置いて下さい．それから注意してその端子をプリント基板へハンダづけして下さい．ハンダづけ後，チップ部品のハンダ・ブリッジやいもハンダがあるかチェックして下さい．

CHIP DEVICES INFORMATION

These stereo cassette decks utilize chip devices that allow miniaturization of circuitry previously unattainable in an audio product. These chip devices require specialized handling during service. Please read the following before attempting to service these cassette decks:

Identification of Chip Devices

There are two types of chip devices being used in the cassette deck, and although they have similar size and shape, they can be identified as follows:

Chip resisters -- have a three digit number which represents the value of resistance. The first two digits indicate the significant numeric value of resistance. The third digit or multiplier indicates the number of zeros after the first two digits. Please follow the examples below:

Number on Device		Resistive Value
470	=	47 ohms
471	=	470 ohms
472	=	4.7 k ohms
473	=	47 k ohms

Chip transistors -- can be identified by a two letter code. Use of the schematic diagram, parts list, and parts layout diagram should provide adequate identification for service.

Letter Code	Part Number	Description
ZQ,ZR or ZS	5760558600	2SD601D

Removal and replacement of chip devices

The chip devices are not heatproof or shockproof. The devices are made of ceramic and plastic moldings so they can not stand a direct shock to them. When soldering the devices, (A) set the device flat on the printed circuit board, (B) sometimes when one terminal is solderd, the other unsoldered terminal is slightly rasied. In such a case, do not try to push down the end of the device. Also try to keep prolonged heat away from the area of the device and having an excess of solder as this might result in a short. Do not mount the chip devices incorrectly.

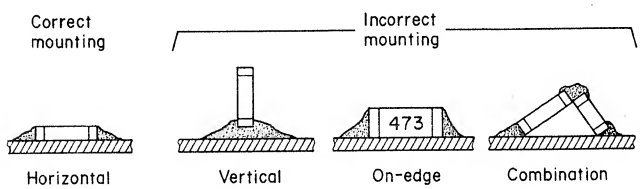

When removing a chip device, it is recommended to heat the terminals of the device repeatedly two or three times and then slide the chip device as described below.

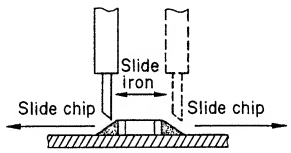

After the device has been removed, make sure that no damage has occurred to the printed circuit board. To replace a chip device, use a pair of tweezers to place the device where it is needed. Then carefully solder the terminals to the printed circuit board. After cooling, check for solder bridges or cold solder joints on the chip device.

TEAC SCHEMATIC DIAGRAM (dbx NR PCB) V-900X/V-800X

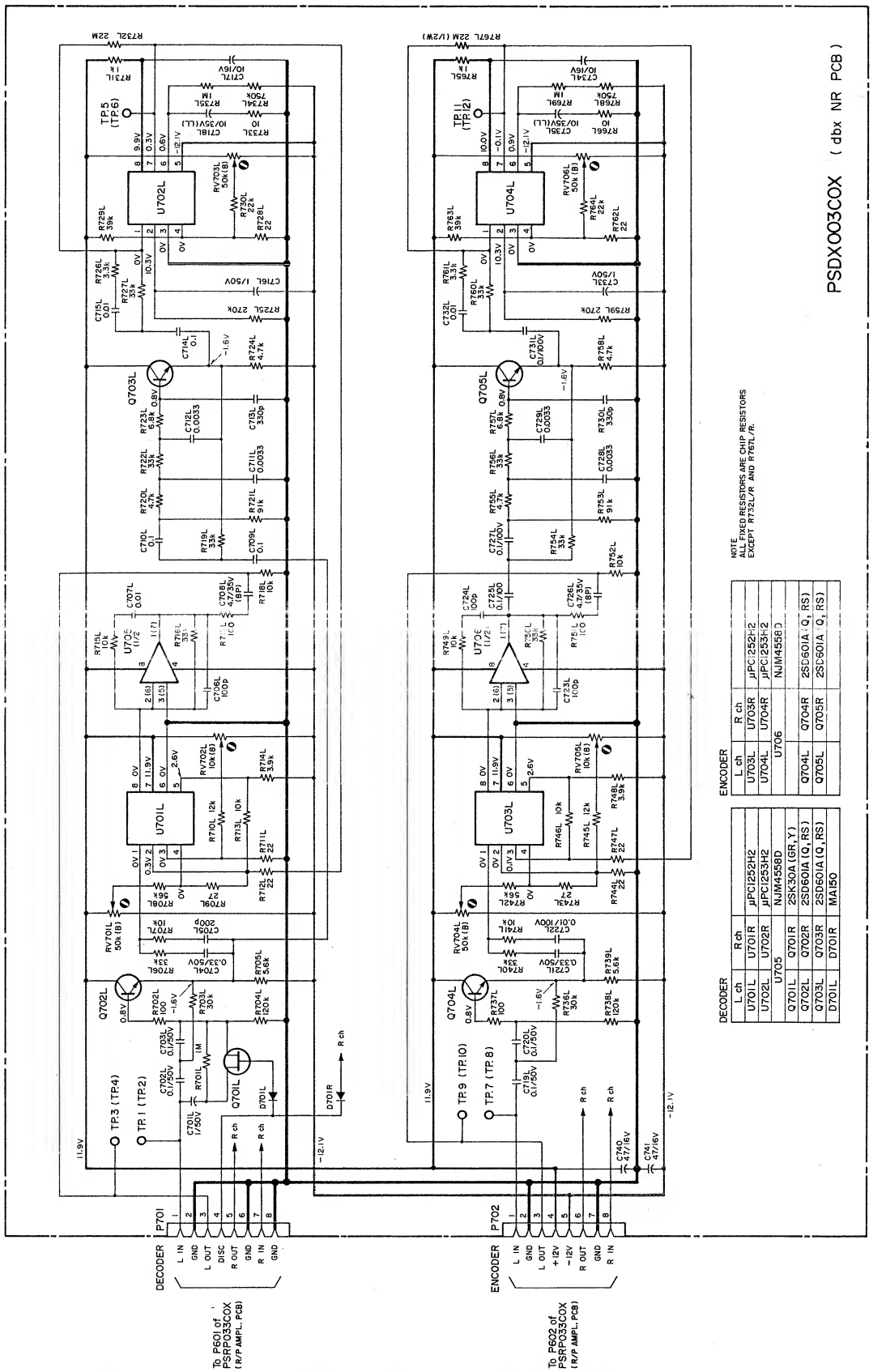

V-900X/V-800X Stereo Cassette Deck

3rd Issue; April, 1984

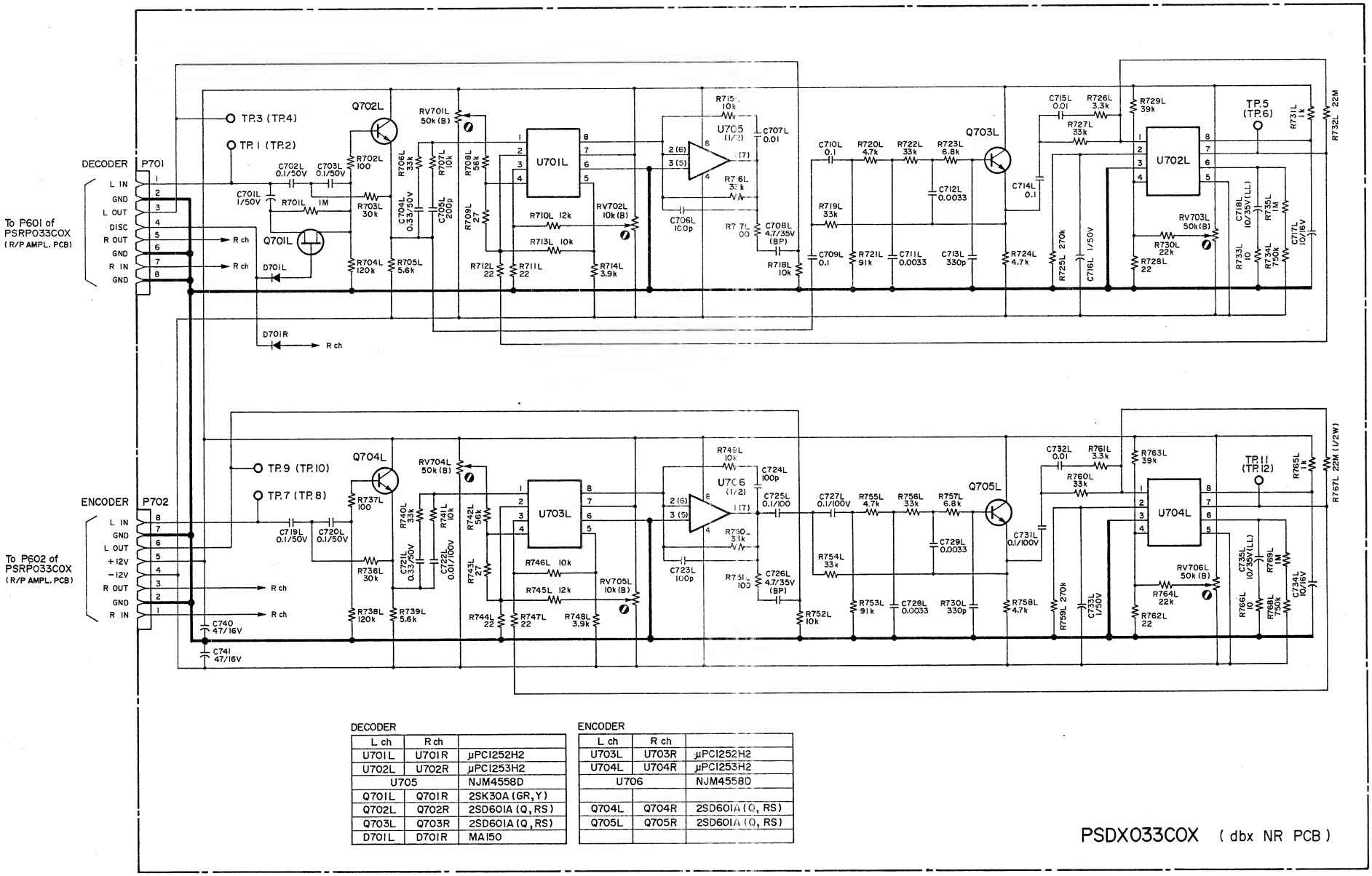

DECODER

L ch	R ch	
U701L	U701R	μPC1252H2
U702L	U702R	μPC1253H2
U705		NJM4558D
Q701L	Q701R	2SK30A (GR, Y)
Q702L	Q702R	2SD601A (Q, RS)
Q703L	Q703R	2SD601A (Q, RS)
D701L	D701R	MA150

ENCODER

L ch	R ch	
U703L	U703R	μPC1252H2
U704L	U704R	μPC1253H2
U706		NJM4558D
Q704L	Q704R	2SD601A (Q, RS)
Q705L	Q705R	2SD601A (Q, RS)

PSDX033COX (dbx NR PCB)

TEAC® V-900X/V-800X

2nd Issue; February, 1984

TEAC®

CIRCUIT DESCRIPTION

V-900X

Stereo Cassette Deck

Table of Contents

1. I.C. Functions ····· 2
2. Function Key Input Circuitry ·····15
   2-1. Key Matrix
   2-2. Multiple Key Operation
3. Data Exchange between U905 and U904··17
   3-1. Serial Data Transfer
   3-2. 5-bit Data Transfer
   3-3. 5-bit Data Content
4. FL Meter Lighting Circuitry ·····19
   4-1. Peak Level Meter
   4-2. Counter and CPS Display
5. Remote Circuitry ·····22
6. Cam and Motor Control ·····23
7. Timers ·····24
8. CPS and Intro Check ·····26
   8-1. CPS_{FF} (Intro Check)
   8-2. CPS_{REW}
   8-3. Compensation for Tape Overtravel
9. Multi-mode Counter ·····28
   9-1. Tape Counter Mode
   9-2. Tape Remaining Time Counter Mode
   9-3. TRT Counter Mode
10. Audio Signal Path ·····28
   10-1. NR System and Signal Path
   10-2. Monitor Circuitry
11. Auto-fader ·····31
   11-1. Outline
   11-2. Electronic Attenuator
   11-3. Initial Set
   11-4. Fade In
   11-5. Fade Out
12. Auto-Calibration ·····34
   12-1. Circuit Composition
   12-2. Auto-Calibration Process
   12-3. Leader Tape Detection
   12-4. Level Adjustment (Rough)
   12-5. Bias Adjustment
   12-6. VCA Level Adjustment
   12-7. EQ Adjustment

5704022900

Note: The wave-forms (pulse widths) shown in the various time charts in this manual have been expanded and reduced for ease of explanation, and therefore do not represent the correct time relationships. When referring to a time chart, be sure to check the time values and units.

1. I.C. Functions

Pin functions, block diagrams, and/or internal circuitry will be given in this manual for the main I.C.s used in the V-900X unit.

U-905 HD44801B69 or HD44801B56 Key Microcomputer

Pin	Code	Function	
1	D_3	Executes a check and write of 5-bit data when a High is input.	
2	D_4	Outputs High (Static signal) in response to Intro Check key input.	
3	D_5	Outputs H after writing the 5-bit data when H is input to D_3.	
4	D_6	Key input, serial clock data output pin.	
5	D_7		
6	D_8	H (static sig.) is output in Play and Rec/play modes. FL tube Tape display.	
7	D_9	High is output (static signal) on memory Key input. FL tube Memory display.	
8	D_{10}	Dig.1 — Key return signal source output	LED display common signal. — High is output.
9	D_{11}	Dig.2	FL tube Dig.1
10	D_{12}	Dig.3	FL tube Dig.5
11	D_{13}	Dig.4	FL tube Dig.4
12	D_{14}	Dig.5	FL tube Dig.3
13	D_{15}	Dig.6	FL tube Dig.2
14	NC	(NC)	
15	RESET	High:CPU reset, Low:CPU operation, power on reset pin.	
16	GND	Ground	
17	OSC_1	External oscillator connection pin (400kHz ceramic oscillator KBR400B).	
18	OSC_2		
19	HLT	V_{CC} level.	
20	TEST	V_{CC} level.	
21	V_{cc}	Power supply pin (+5V)	
22	R_{00}	5-bit data including D_1	
23	R_{01}		
24	R_{02}		
25	R_{03}		
26	R_{10}	Input pin for return signal from key matrix.	
27	R_{11}		
28	R_{12}		
29	D_{13}		
30	INT_0	Left reel revolution pulse input pin. (for tape counter and remaining time calculation.)	
31	INT_1	(NC)	
32	R_{20}	FL tube Seg. a	record LED display signal output.
33	R_{21}	FL tube Seg. b	play LED display signal output.
34	R_{22}	FL tube Seg. c	pause LED display signal output.
35	R_{23}	FL tube Seg. d	record mute LED display signal output.
36	R_{30}	FL tube Seg. e	(fast forward LED display signal output.)
37	R_{31}	FL tube Seg. f	(rewind LED display signal output.)
38	R_{32}	FL tube Seg. g	(stop LED display signal output.)
39	R_{33}	FL tube Seg. h	
40	D_0	High (static signal) is output except for play and rec/play modes. FL tube Source display.	
41	D_1	5-bit data including R_{00}-R_{03}.	
42	D_2	High is input when metal tape is detected (thickness compensation for remaining tape meter.).	

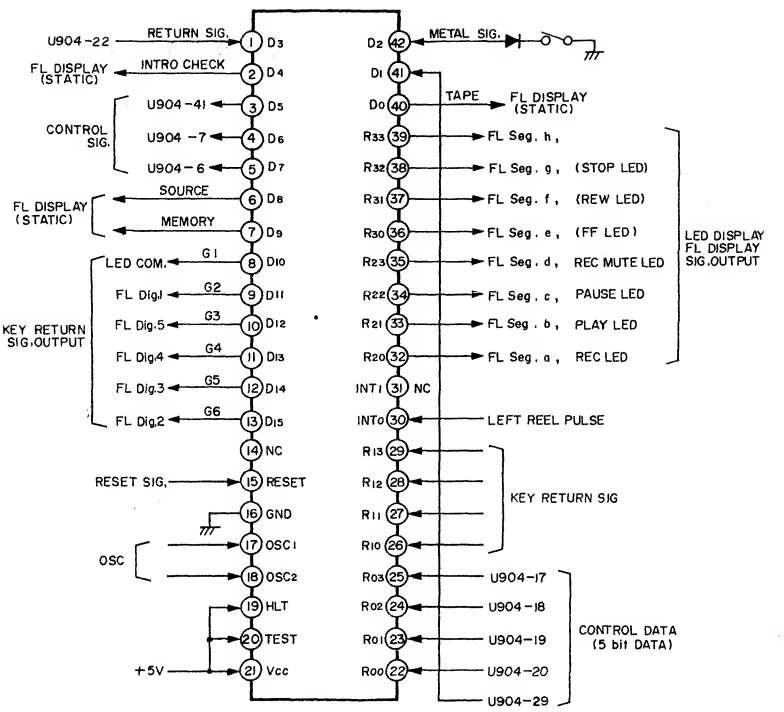

Fig.1-1 U905 HD44801B69 or HD44801B56 Pin Chart

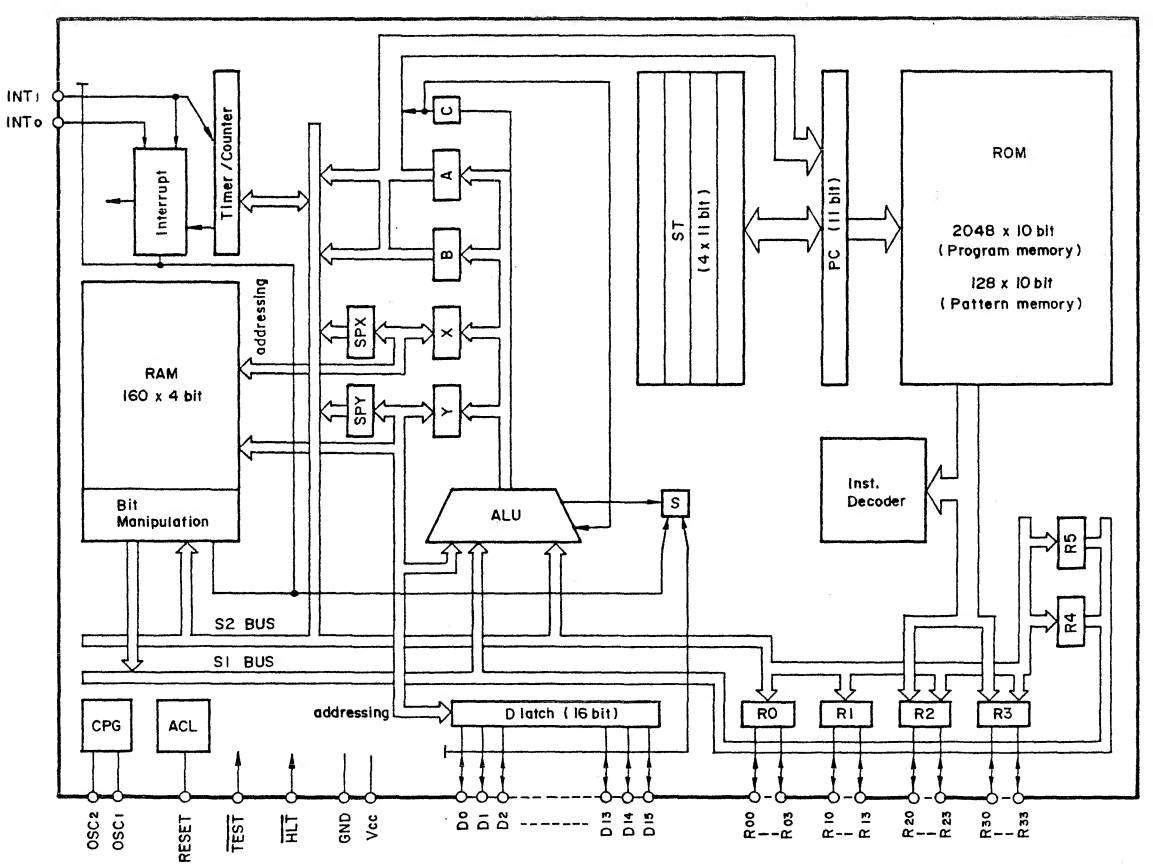

Fig.1-2 U905 Block Diagram

U904 MB8841H-1248
Mechanical microcomputer

Pin	Code	Function
1	OSC_1	External oscillator connection pin (4MHz ceramic oscillator KBR-4.0M)
2	OSC_2	
3	$\overline{RESET}$	L:CPU reset, H:CPU operetion, power-on reset pin.
4	$\overline{IQS}$	Cam interrupt oscillator input (standard signal input for cam position detection).
5	SO	(NC)
6	SI	Key input, serial clock data input pin.
7	$\overline{SCK}$	Key input, serial clock data input pin.
8	$\overline{TC}$	Cam position oscillator input (Cam position signal input).
9	P_0	Control data output pin.
10	P_1	
11	P_2	
12	P_3	(NC)
13	O_0	Signal output for remote control detection.
14	O_1	
15	O_2	
16	O_3	
17	O_4	5-bit data output pin including R_7.
18	O_5	
19	O_6	
20	O_7	
21	GND	GND
22	R_0	Data write coutrol signal, outputs High.
23	R_1	Cam motor control signal output pin.
24	R_2	Cam motor control signal output pin.
25	R_3	Remote control return signal input pin.
26	R_4	Reel motor play signal output pin, outputs High.
27	R_5	Reel motor fast-forward signal output pin, outputs High.
28	R_6	Reel motor rewind signal output pin, outputs High.
29	R_7	5-bit data output pin, including O_4-O_7.
30	R_8	Recording detector signal input pin. High:recording possible, Low: recording not possible.
31	R_9	Right reel pulse input pin (Tape end detect and CPS tape overtravel compensation).
32	R_{10}	Cassette detector signal input pin. High: no cassette, Low: cassetter present.
33	R_{11}	CPS track detection signal input pin.
34	R_{12}	Play mute signal output pin. High:mute off, Low: mute on.
35	R_{13}	Record mute signal output pin. High:mute off, Low:mute on.
36	R_{14}	Bias osc. on/off signal output pin. High:bias off, Low:bias on.
37	R_{15}	Remote record signal input (Low input during remote recording).
38	K_0	Control Data input pin.
39	K_1	
40	K_2	
41	K_3	Data write completion signal input pin.
42	V_{cc}	Power supply pin (+5V).

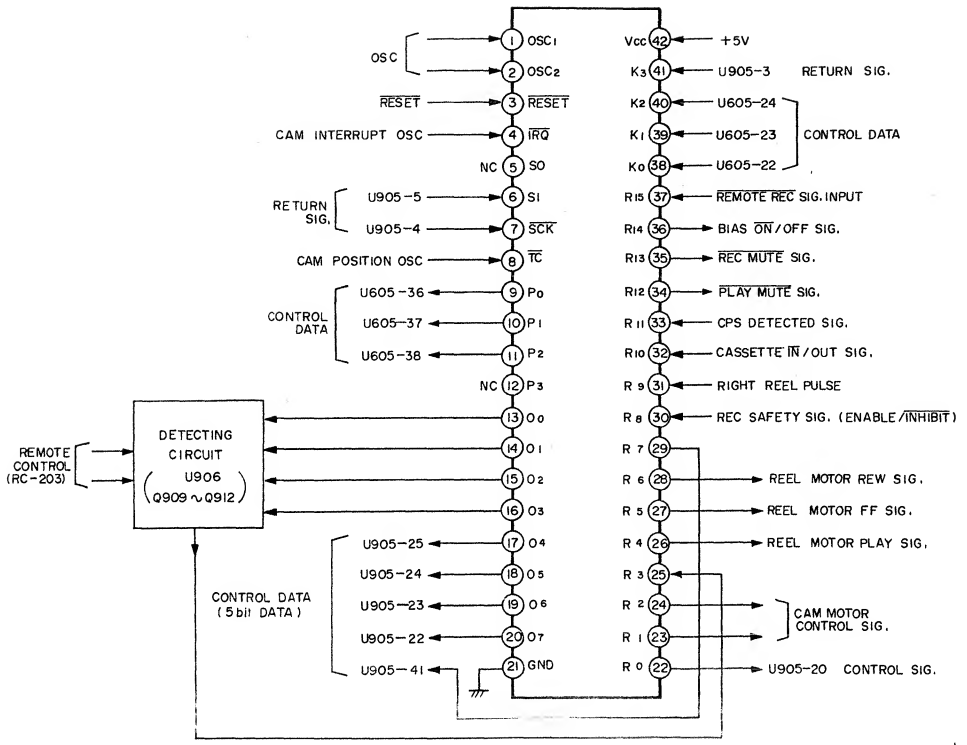

Fig. 1-3 U904 MB8841H-1248 Pin Chart

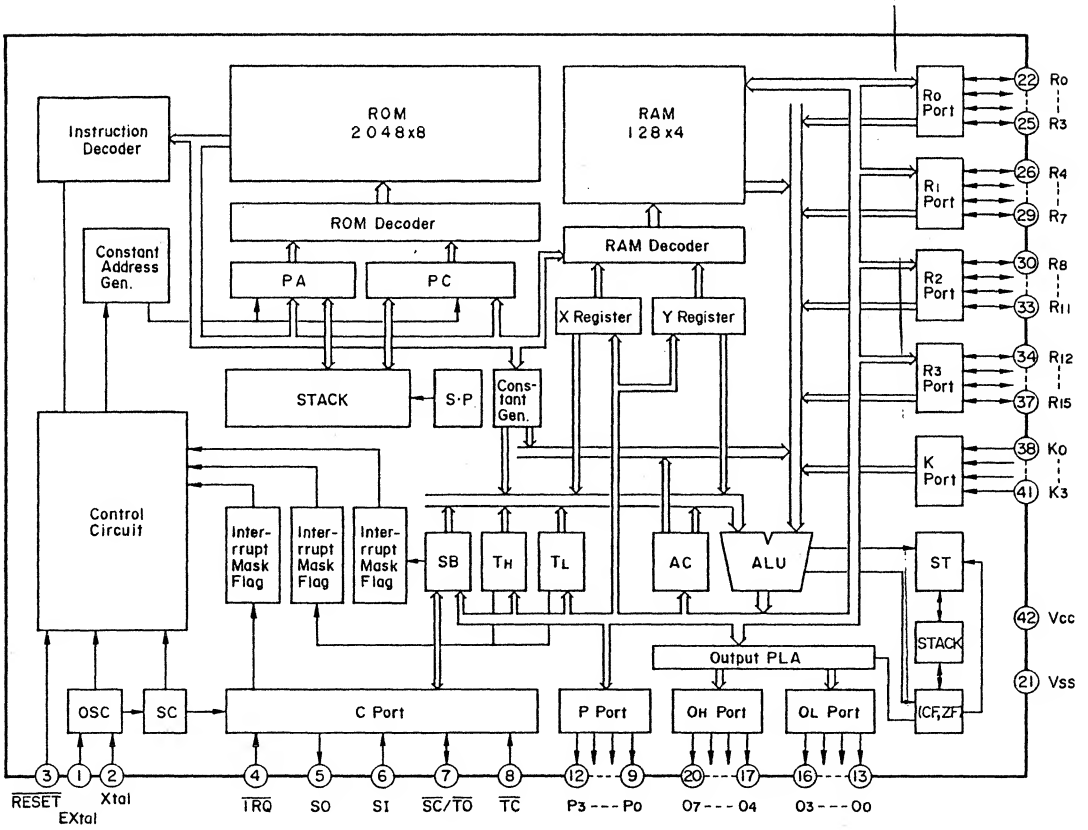

Fig. 1-4 U904 Block Diagram

U605 HD44801B58
Auto Cal Microcomputer

Pin	Code	Function
1	D_3	Fade-in LED light signal, outputs High.
2	D_4	Fade-out LED light signal, outputs High.
3	D_5	3kHz sig. output pin for a to-calibration. H is output.
4	D_6	12kHz sig. output pin for auto-calibration. H is output.
5	D_7	Preset cancel sig., outputs L. Fade-in/out control sig.
6	D_8	Fade-out sig., outputs L. Fede-in/out control sig.
7	D_9	Fade-in sig., outputs L. Fede-in/out control sig.
8	D_{10}	Clock input, fade-in/out completion dataection.
9	D_{11}	Comparator reset sig. output pin. L:during auto-calibrate, H:other times.
10	D_{12}	L:metal, H:other. Tape select signal input pin.
11	D_{13}	L:70 usec, H:120 usec.
12	D_{14}	L:L ch., H:R ch., L/R select signal output pin for autocalibration.
13	D_{15}	Halt condition signal.
14	NC	(NC)
15	RESET	H:CPU reset, L:CPU operation.
16	GND	GND
17	OSC_1	External oscillator connection pin (400kHz ceramic oscillator KBR-400).
18	OSC_2	
19	HLT	Halt signal
20	TEST	V_{CC}
21	V_{cc}	Power supply terminal with back-up.
22	R_{00}	Control data output terminal.
23	R_{01}	
24	R_{02}	
25	R_{03}	Mute signal output pin. H:during auto-calibration, L:other times.
26	R_{10}	Auto-calibration data output pin.
27	R_{11}	
28	R_{12}	
29	R_{13}	
30	INT_0	Right reel pulse input pin.
31	INT_1	(NC)
32	R_{20}	EQ and D/A select signal output pin for auto-calibration.
33	R_{21}	
34	R_{22}	
35	R_{23}	(NC)
36	R_{30}	Control data input pin.
37	R_{31}	
38	R_{32}	
39	R_{33}	Comp signal input pin (comparative signal of L/R signal to standard signal during auto-calibration).
40	D_0	Memo LED light signal, outputs High.
41	D_1	Ref LED light signal, outputs High.
42	D_2	Auto LED light signal, output High.

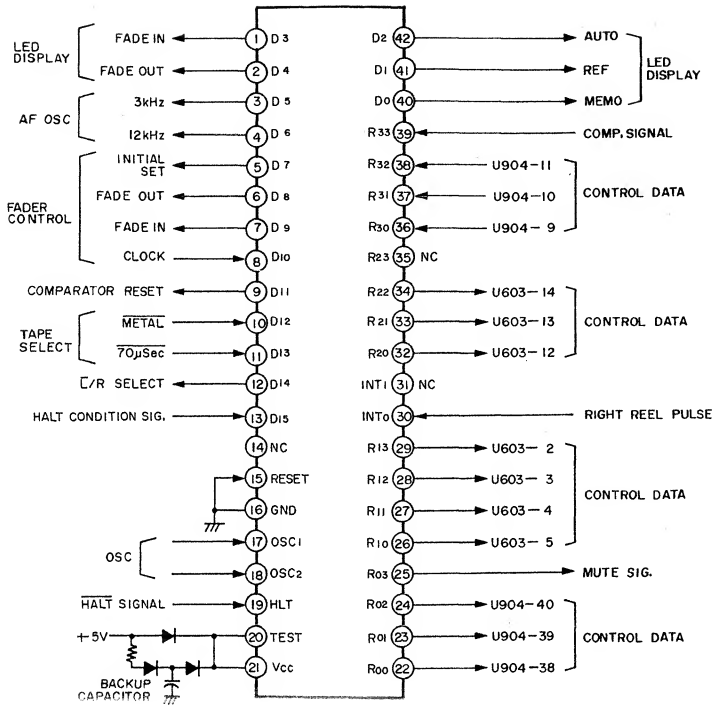

Fig. 1-5 U605 HD44801B58 Pin Chart

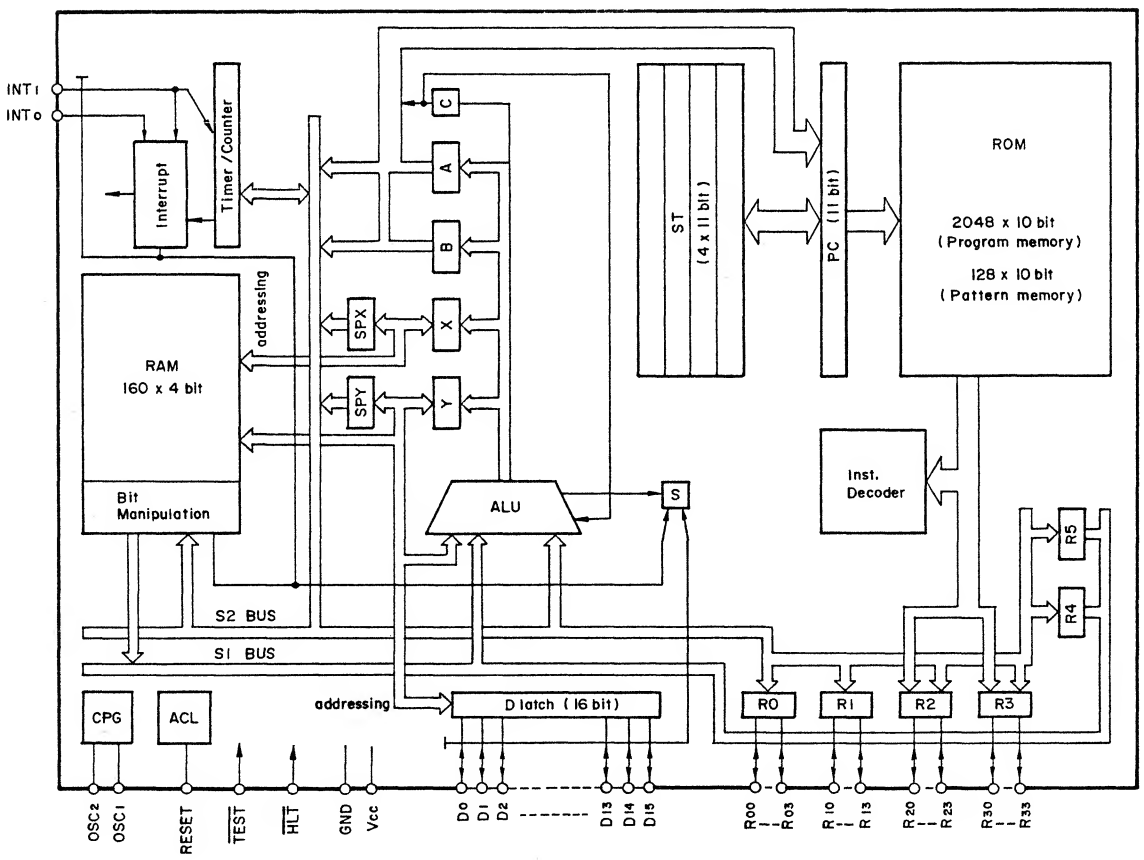

Fig. 1-6 U605 Block Diagram

U603 HA12035
2-channel Automatic Equalizer

Pin	Code	Function	
1	TEST	TEST	
2	D_2	2^3	4-bit data input pin.
3	D_3	2^2	
4	D_4	2^1	
5	D_5	2^0	
6			Hold condenser connection pin.
7			
8			
9			
10			
11	GND	Digital ground	
12	R_0		Mode select signal input pin.
13	R_1		
14	R_2		
15		V_{cc}	
16		D/A 2 output pin(Comparitive output)	
17		D/A 1 output pin (bias control)	
18		EQ output pin (audio signal output pin)	R ch.
19		EQ external connection pin.	
20		EQ external connection pin.	
21		VCA input pin (audio signal input pin.)	
22	GND	Analogue ground	
23		VCA input pin (audio signal input pin.)	L ch.
24		EQ external connection pin.	
25		EQ external connection pin.	
26		EQ output pin (audio signal output pin).	
27		Reference voltage decoupling.	
28	V_{cc}	Power supply pin.	

4-bit Data Chart

MODE	4 bit DATA	Gain	Current	Voltage
VCA (L ch,R ch)	0000	Min	--	--
EQ (L ch,R ch)	1111	Max	--	--
D/A 1 (BIAS)	0000	--	Max	--
	1111	--	Min	--
D/A 2 (COMP)	0000	--	--	Max
	1111	--	--	Min

4 bit Data(BCD)
D_0 : 2^0
D_1 : 2^1
D_2 : 2^2
D_3 : 2^3

Mode Selector Chart

	R_2	R_1	R_0	
No effect	0	0	0	(Mode for fast forward or rewind)
EQ R	0	0	1	Controls the 12kHz right-channel equalizer.
EQ L	0	1	0	Controls the 12kHz left-channel equalizer.
D/A 2 (COMP)	0	1	1	Controls the reference voltage for the comparator.
VCA L	1	0	0	Contorls left-channel gain.
VCA R	1	0	1	Controls right-channel gain.
D/A 1 (BIAS)	1	1	0	Controls bias.
RESET	1	1	1	Discharges the hold condenser

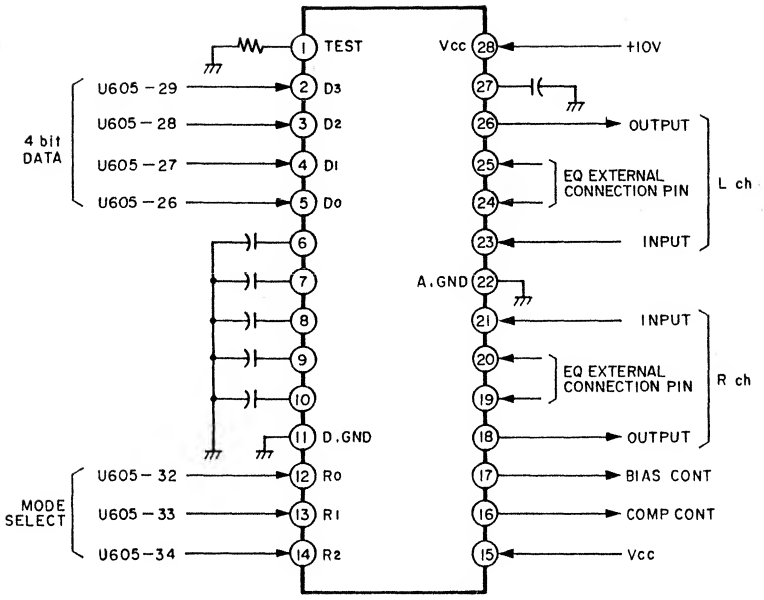

Fig.1-7 U603 HA12035 Pin Chart

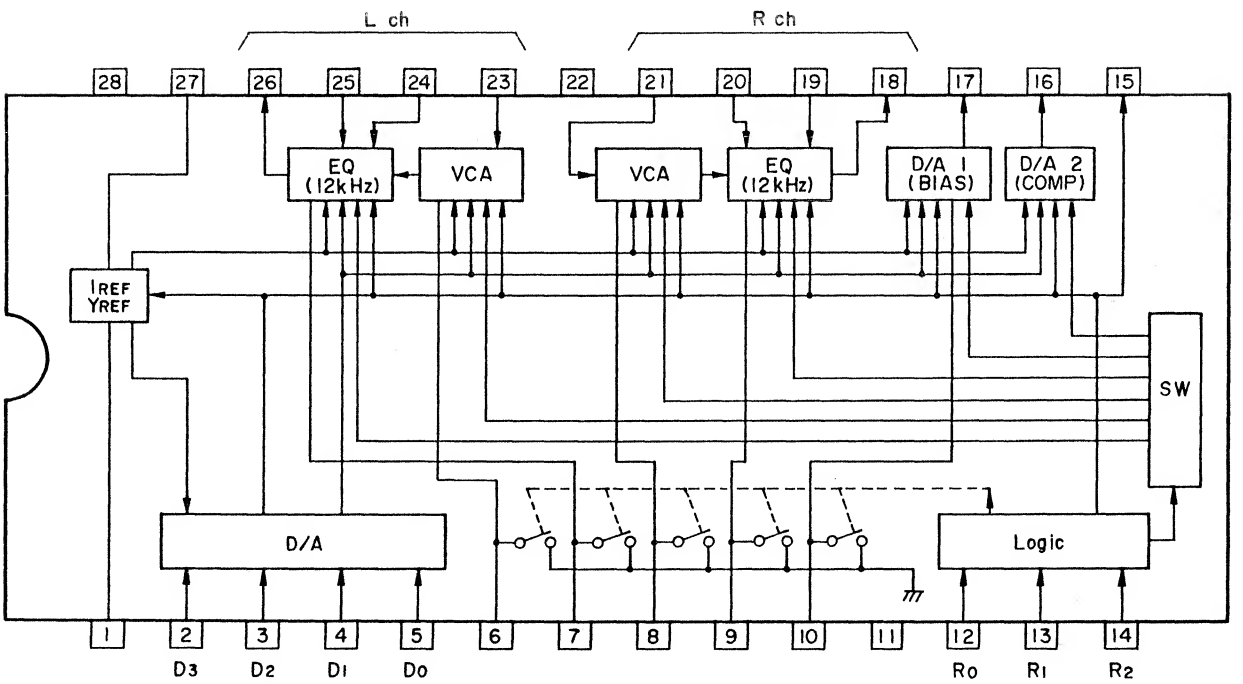

Fig.1-8 U603 Block Diagram

U601 TC9153P Electronic Volume I.C.

Pin	Code	Function.	
1	V_{SS}	Minus power supply pin.	
2	L-OUT_1	Left channel output 1.	10 dB/step x 7
3	L-IN_1	Left channel input 1.	
4	A-GND	Right channel ground.	
5	L-IN_2	Left channel input 2.	2 dB/step x 5
6	L-OUT_2	Left channel output 2.	
7	INH	Low:Stop operation (maintain), set to High.	
8	DCO	Attenuation display DC output pin (unused).	
9	OSC	Time constant circuit for internal osc., fade speed set pin.	
10	U/D	High:fade-in (up), Low:fade-out (down).	
11	R-OUT_2	Right channel output 2.	2 dB/step x 5
12	R-IN_2	Right channel input 2.	
13	A-GND	Left channel ground.	
14	R-IN_1	Right channel input 1.	10 dB/step x 7
15	R-PUT_1	Right channel output 1.	
16	V_{DD}	Positive power supply pin.	

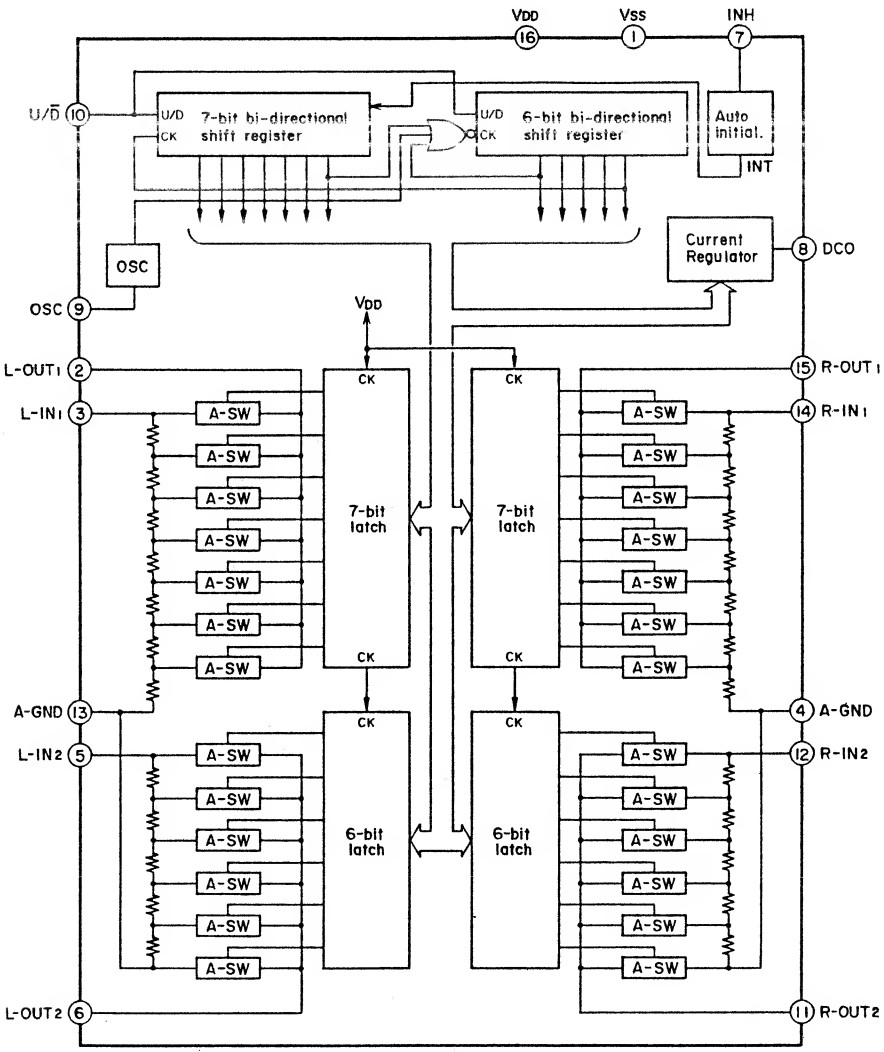

Fig. 1-9 U601 Block Diagram

U606 TC4053BP Triple 2-channel Multiplexer/demultiplexer

Pin	Code	Function
1	1Y	400Hz/3kHz/12kHz signal input pin for auto-calibration.
2	0Y	L ch audio signal input pin.
3	1Z	400Hz/3kHz/12kHz signal input pin for auto-calibration.
4	Z_{COM}	R ch output pin.
5	0Z	R ch audio signal input pin.
6	INH	Set to Low.
7	V_{EE}	Minus power supply pin.
8	V_{SS}	GND
9	C	Control data input pin.
10	B	
11	A	
12	0X	Unused
13	1X	
14	X_{COM}	
15	Y_{COM}	L ch output pin.
16	V_{DD}	Positive power supply pin.

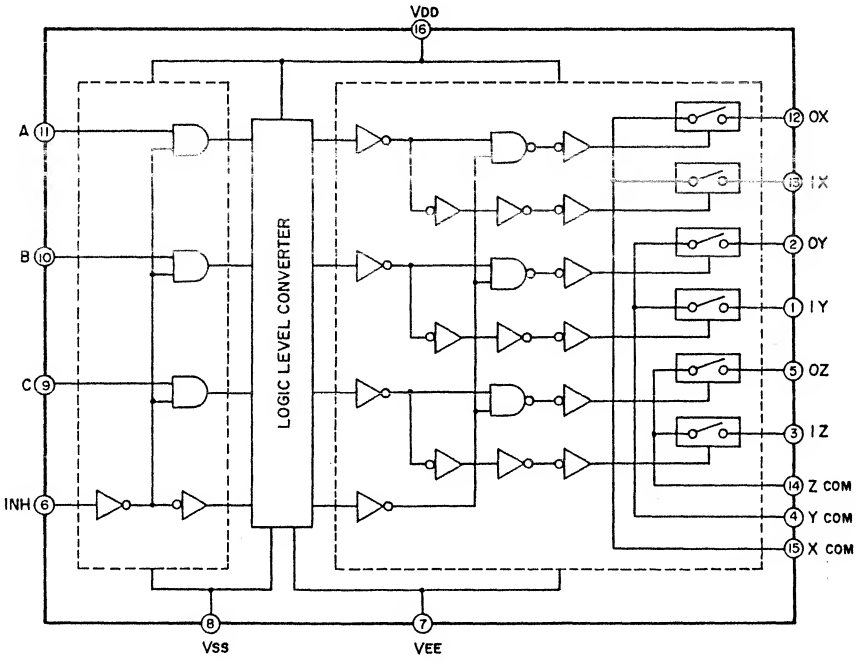

Function Chart

CONTROL INPUTS				"ON" CHANNEL
6	9	10	11	
INH	C	B	A	
L	L	L	L	0X, 0Y, 0Z
L	L	L	H	1X, 0Y, 0Z
L	L	H	L	0X, 1Y, 0Z
L	L	H	H	1X, 1Y, 0Z
L	H	L	L	0X, 0Y, 1Z
L	H	L	H	1X, 0Y, 1Z
L	H	H	L	0X, 1Y, 1Z
L	H	H	H	1X, 1Y, 1Z

Fig. 1-10 U606 Block diagram

UL-02 MSL9359RS 2-channel 15-dot Level Meter Driver

Pin	Code	Function
1	O_1	-20dB meter output.
2	O_2	
3	O_3	
4	O_4	
5	O_5	
6	O_6	
7	O_7	15-dot meter segment light signal output pin.
8	O_8	
9	O_9	
10	O_{10}	
11	O_{11}	
12	O_{12}	
13	O_{13}	
14	O_{14}	
15	O_{15}	+10dB meter output.
16	DIV.OUT	Clock minutes signal output pin, unused.
17	GND	Ground
18	M.MODE	Peak hold manual mode select pin (set to Low).
19	OSC.IN	Clock oscillator time constant circuit connection pin.
20	POR	Power on reset input pin, resets and mutes on Low.
21	A.MODE	Peak hold auto mode select pin, set to Low.
22	M.RESET	Peak hold auto reset time constant connection pin.
23	R_{IN}	Right channel input pin.
24	L_{IN}	Left channel input pin.
25	$\overline{L_{OUT}}$	Meter segment left channel common signal output pin.
26	$\overline{R_{OUT}}$	Meter segment right channel common signal output pin.
27	V_{CC}	Power supply pin.
28	V_{CCD}	Power supply pin.

UL02 MSL9359RS Block Diagram

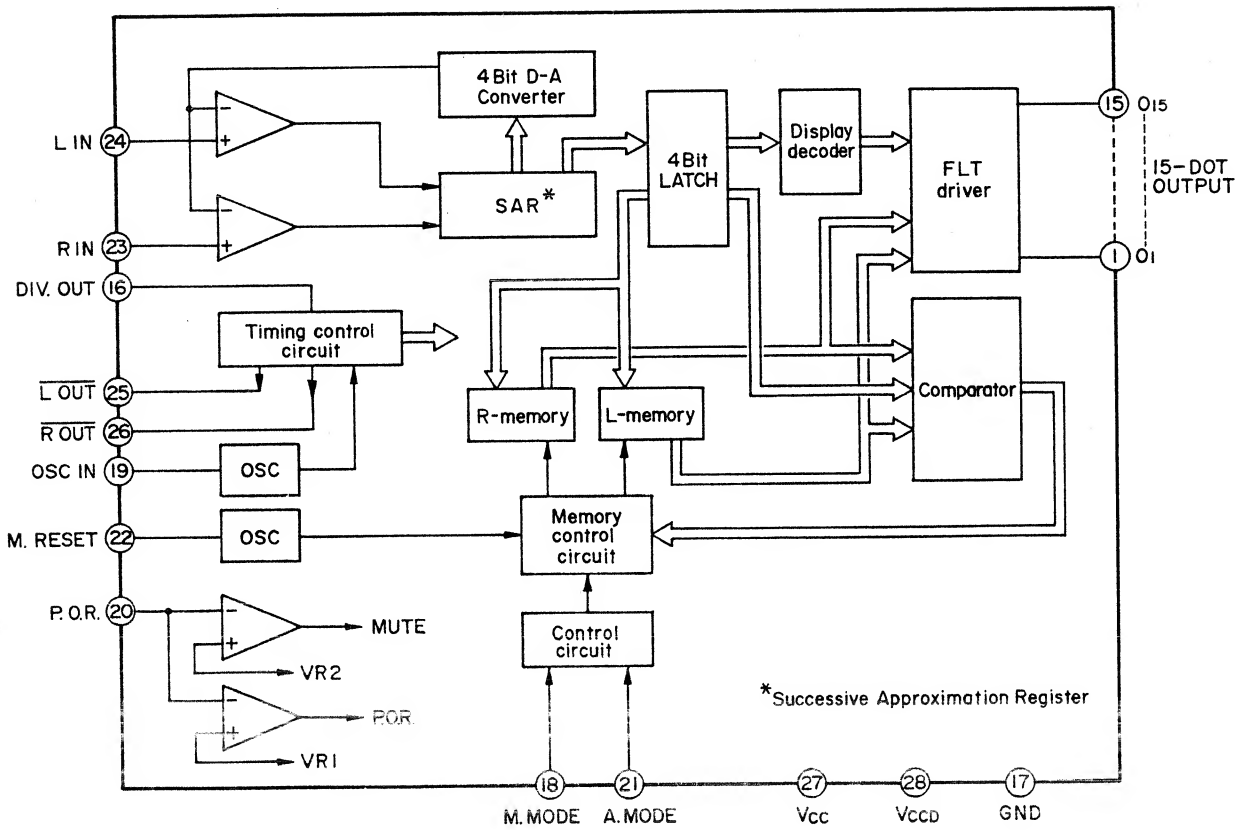

Fig. 1-11

UL01 TA7318P Wide-range Peak Power Meter Driver

Pin	Code	Function
1	GND	Ground pin for minus power supply.
2	OUTPUT L	L ch output pin, output is DC.
3	HOLD L	L ch time constant external pin.
4	INPUT L	L ch input pin.
5	$-V_{EE}$	Minus power supply pin, ground on the V-900X.
6	INPUT R	R ch input pin.
7	HOLD R	R ch time constant external pin.
8	OUTPUT R	R ch output pin, output is DC.
9	$+V_{CC}$	Positive power supply pin.

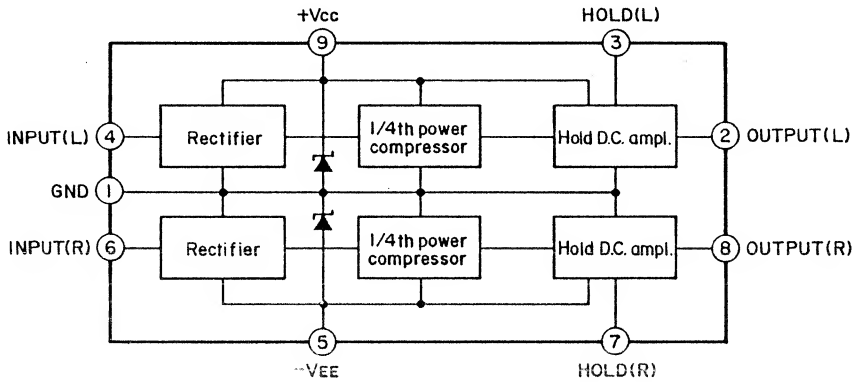

Fig. 1-12 UL01 Block Diagram

U701L/R, U702L/R HA12058 B/C-type Switchable Processor

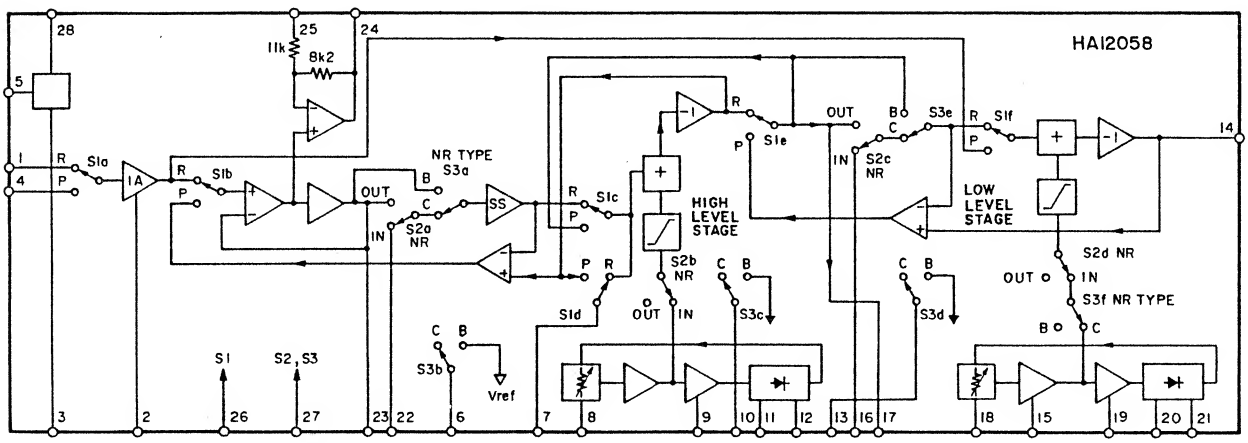

Fig. 1-13

2. Function Key Input Circuitry

2-1. Key Matrix.

The function key input circuit is as shown in figure 2-1. (The diagram indicates the condition when the rewind key has been depressed).

The operational mode of the deck is determined by the combinations (timings) of the D_{10}-D_{15} outputs and the R_{10}-R_{13} input. For example, as shown in figure 2-2, when the D_{14} output is High, and a High is input to R_{11}, the U905 micro-computer determines that it has been ordered to enter rewind mode.

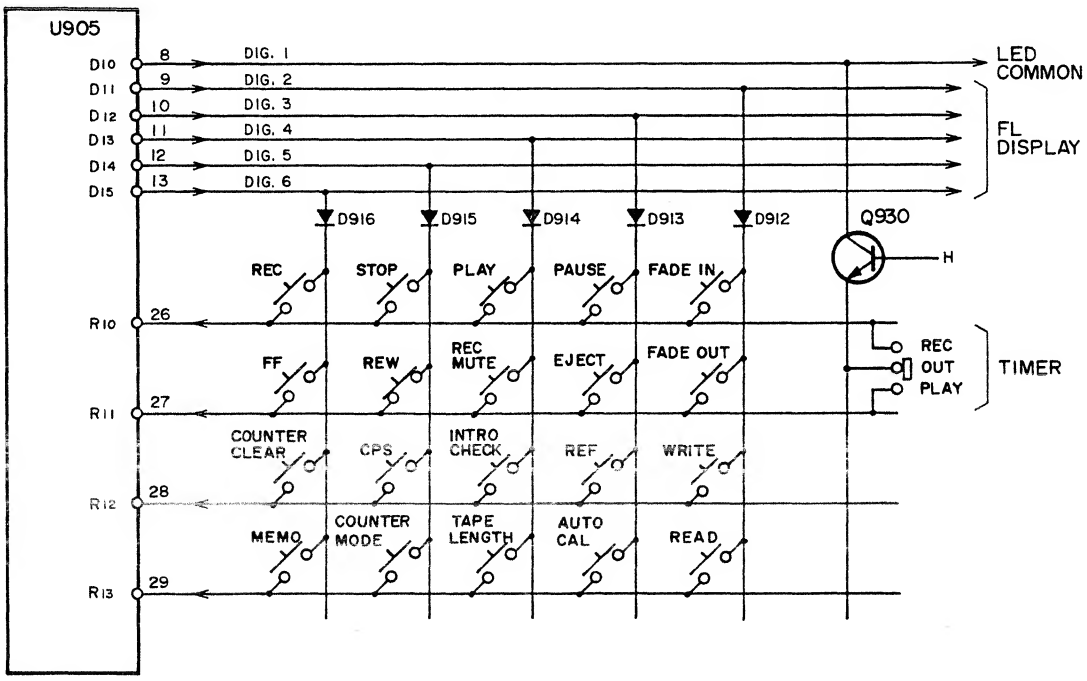

Fig. 2-1 Key Matrix

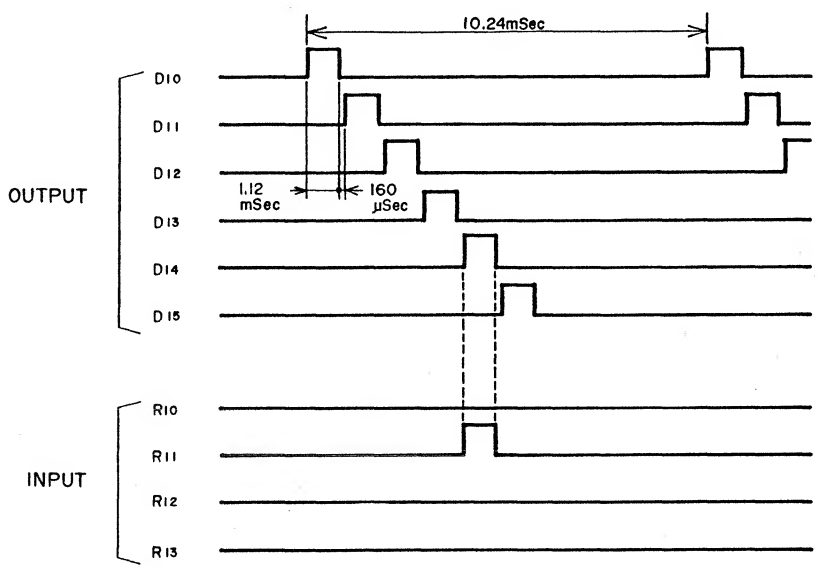

Fig. 2-2 Diagram of Rewind Mode

2-2. Multiple Key Operation.

The U905 key microcomputer basically reacts as follows in response to keyed input.
When a key is operated, the U905 receives the keyed function command, but it will not accept a new command unless all the keys are turned off first. As a result of this, when multiple keys are depressed at the same time, the first key to be depressed will be received, regardless of when they are turned off. The four special cases of FF and REW, PLAY and REC, PLAY and PAUSE, and REC and PAUSE are treated differently from the above, though. In addition, if the STOP key is depressed with any other key, the STOP key is given priority.

Table 2-1 Multiple Key Modes when Depressed

		Second key depressed					
		REW	STOP	PLAY	F.FWD	REC	PAUSE
First key depressed	REW		STOP	REW	STOP	REW	REW
	STOP	STOP		STOP	STOP	STOP	STOP
	PLAY	PLAY	STOP		PLAY	REC/PLAY	PAUSE
	F.FWD	STOP	STOP	F.FWD		F.FWD	F.FWD
	REC	STOP	STOP	REC/PLAY	STOP		REC/PAUSE
	PAUSE	PAUSE	STOP	PAUSE	PAUSE	REC/PAUSE	

Table 2-2 Modes after Multiple Key Depression

[ ]: Differences from Table 2-1 above.

		Second key released					
		REW	STOP	PLAY	F.FWD	REC	PAUSE
First key depressed	REW		STOP	REW	F.FWD	REW	REW
	STOP	STOP		STOP	STOP	STOP	STOP
	PLAY	PLAY	STOP		PLAY	REC/PLAY	PAUSE
	F.FWD	REW	STOP	F.FWD		F.FWD	F.FWD
	REC	STOP	STOP	REC/PLAY	STOP		REC/PAUSE
	PAUSE	PAUSE	STOP	PLAY	PAUSE	REC/PAUSE	

3.Data Exchange between U904 and U905

3-1. Serial data transfer.

Refer to figures 3-1 and 3-2. The U905 key microcomputer receives an input from the key matrix, and transfers the content to the U904 mechanical microcomputer after changing it to serial data.

The serial data is composed of 4-bit key matrix return signals, placed one on each of DIG-1 to DIG-6.

The U904, after receiving the serial data, determines the deck's operation mode, and sends that status information to U905 after converting it to 5-bit data. The U904 checks the SI input at the breaking time of the SCK clock, and writes data if any is available. SI data is output from the U905 once each time a key switch is turned on or off.

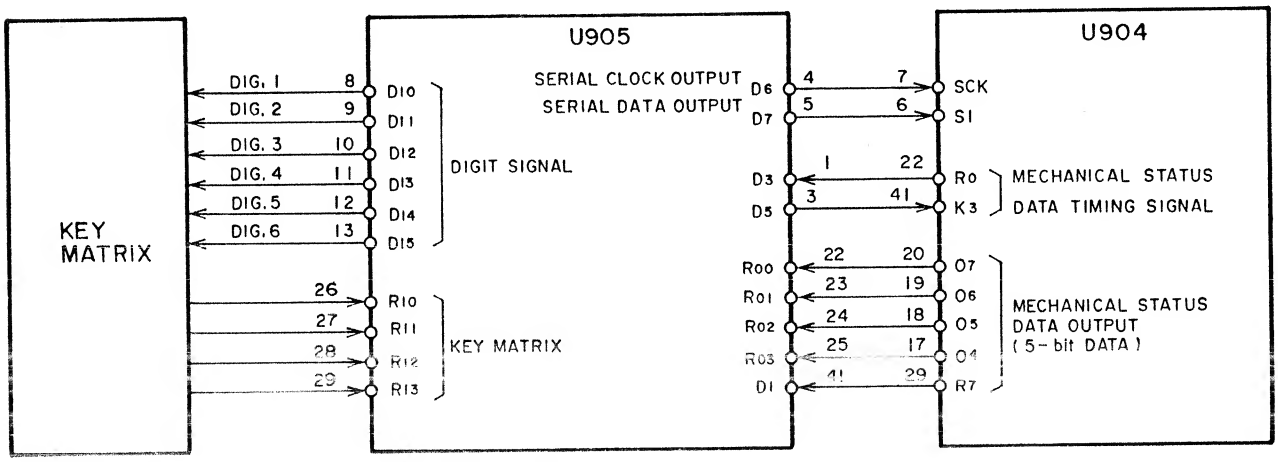

Fig. 3-1 Data Exchange between U905 and U904

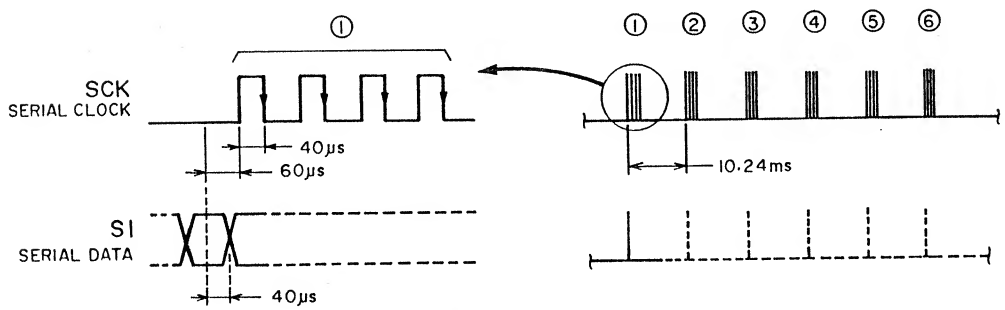

Fig. 3-2 Waveforms

3-2 5-bit Data Transfer.

Operations of the mechanical microcomputer U904:

1. Determines the deck's function mode through serial data input, and creates 5-bit data.
2. R_0 port goes High, and 5-bit data is output.
3. After outputting the 5-bit data, checks the status of the K3 input port. If a High is detected, the R_0 port is returned to Low.

Operation of key microcomputer U905:

1. When D_3 port input goes High, it writes the 5-bit data, and then changes D_5 output port to High.
2. Checks the D_3 port input, and is Low, then changes D_5 port output to Low.

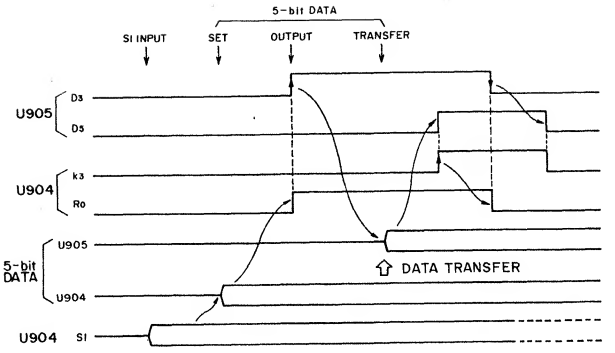

Fig. 3-3 5-bit Data Transfer

3-3 5-bit Data Content.

The 5-bit data output by U904 after it receives serial data from U905 is shown below.

Pin of U904					MODE
20	19	18	17	29	
O_7	O_6	O_5	O_4	R_7	
L	L	L	L	L	STOP
L	L	L	H	L	INTRO SCAN FF
L	L	H	L	L	REW
L	L	H	H	L	CPS FF
L	H	L	L	L	PAUSE
L	H	L	H	L	CPS COUNTER CLEAR
L	H	H	L	L	FF
L	H	H	H	L	REC PAUSE
H	L	L	L	L	PLAY
H	L	L	H	L	INTRO SCAN PLAY
H	L	H	L	L	TAPE END SIGNAL
H	L	H	H	L	CPS REW
H	H	L	L	L	REC MUTE
H	H	L	H	L	CPS DATA COUNT DOWN)
H	H	H	L	L	REC PLAY
H	H	H	H	L	INTRO SCAN REW
H	L	H	H	H	MEMORY
H	L	H	L	H	COUTER MODE
L	L	H	L	H	TAPE LENGTH
H	H	L	L	H	CASSETTE CUT
L	H	L	H	H	CPS DATA (COUNT UP)
H	L	L	H	H	CLEAR
L	H	L	L	H	AUTO CAL REW

4. FL Meter Lighting Circuitry

4-1. Peak Level Meter.

Refer to figure 4-1.

The left or right channel audio signal which is applied to pin6/pin 4 of UL01, is changed to DC current in response to its level, and sent to the UL02 meter driver.

The UL02 outputs a level meter light signal in response to this input signal, and lights the left and right channel meters alternatively every 0.5msec. as determined by an oscillator inside the I.C. The peak hold time is determined by the time constant circuit formed by RL11 and CL08, and ranges from about 0.5 to 1.0 seconds.

The meter scale numbers and the ∞ are always lit.

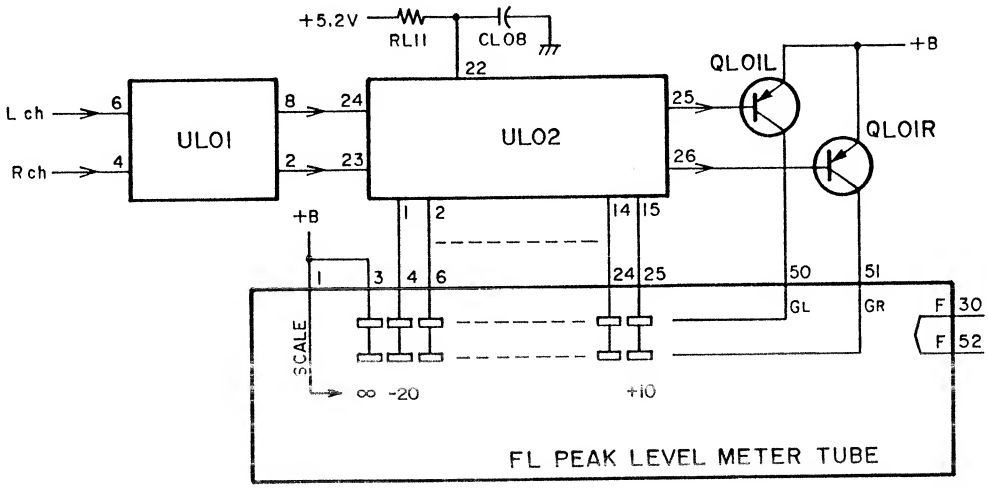

Fig. 4-1 Peak Level Meter

4-2 Counter and CPS Display

The circuit is composed as shown in figure 4-2, and figure 4-3 is a timing chart for a lighting example. Note that the orders of the key matrix signal source digit numbers (G1-G6) and the FL Meter tube digit numbers (G1-G5) are different.

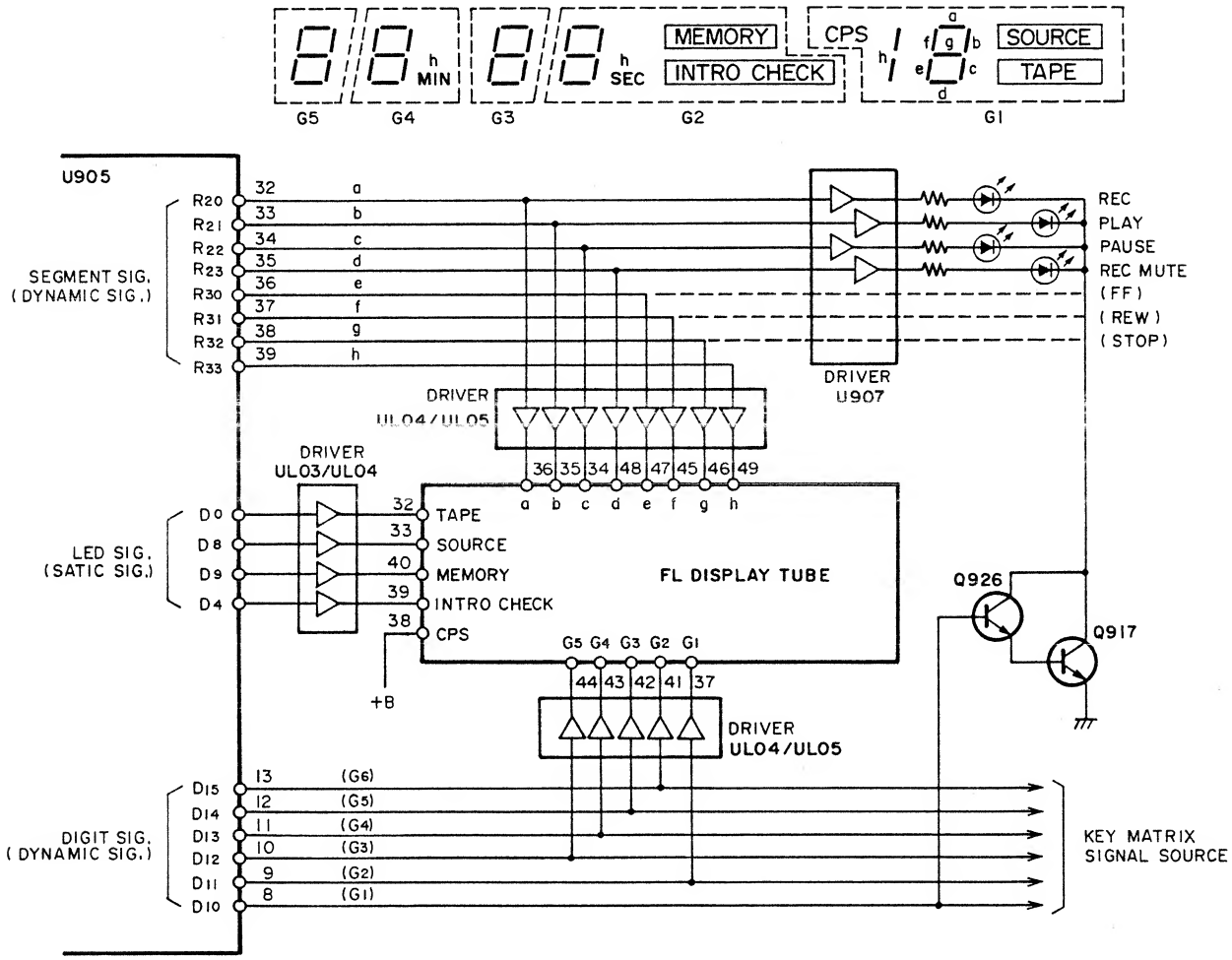

Fig. 4-2 FL Meter Circuit Diagram

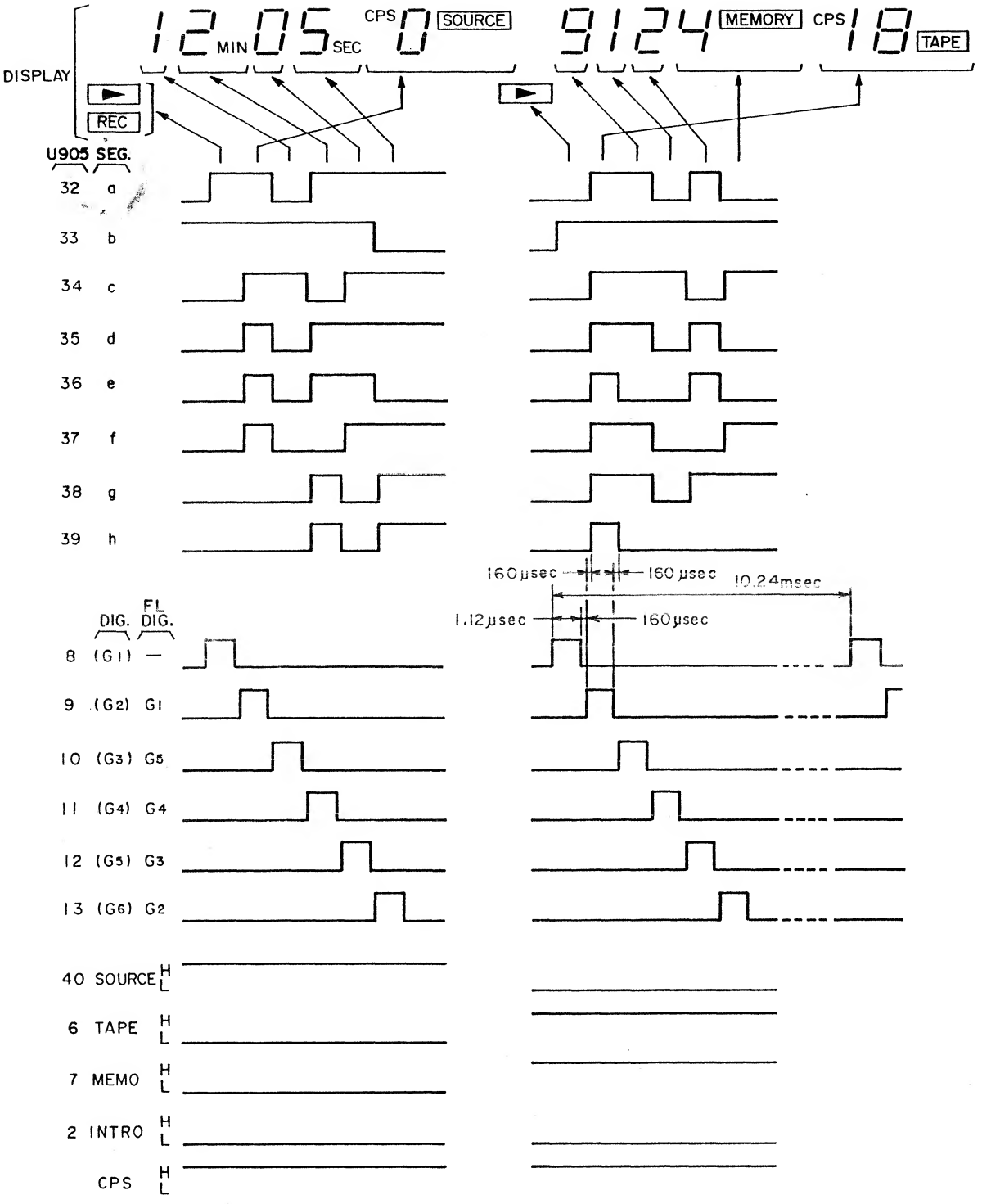

Fig. 4-3 Timing Example of Digit

5. Remote Circuitry

The remote control unit used in the V-900X is the RC-203, which is a two-lead wired type. Operation command signals are sent from the RC-203 to the V-900X as DC potentials (static signals). The remote circuit shown in figure 5-1 then detects the command content from these signals.

The output signals from pins 13-16 of U904 turn Q909-Q912 on and off, and change the resistance value between pin 2 of U906 and ground. As a result the voltage potential of pin 1 (pin 5) of U906 becomes a step-form.

When a switch is pressed on the RC-203, a DC signal corresponding to that command is applied to pin 6 of U906. The potential of pin 5 of U-906 enters step-form (rises), and when the potential reaches or exceeds that of pin 6 the output from pin 7 changes Low to High. The U904 mechanical microcomputer detects this rise timing, and determines the command content.

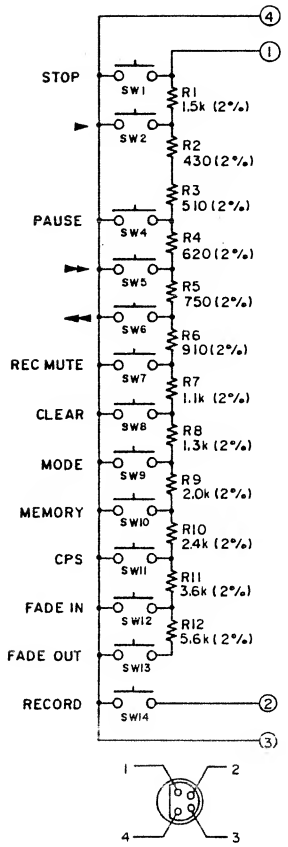

Fig. 5-2 RC-203 Remote Control

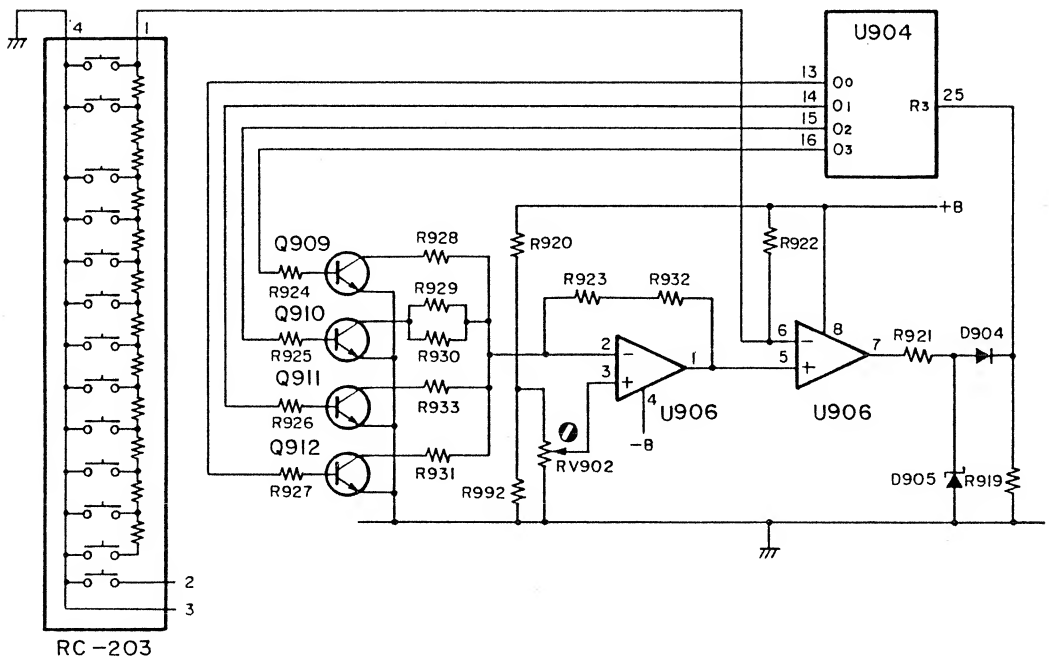

Fig. 5-1 Remote Control Detection Circuit

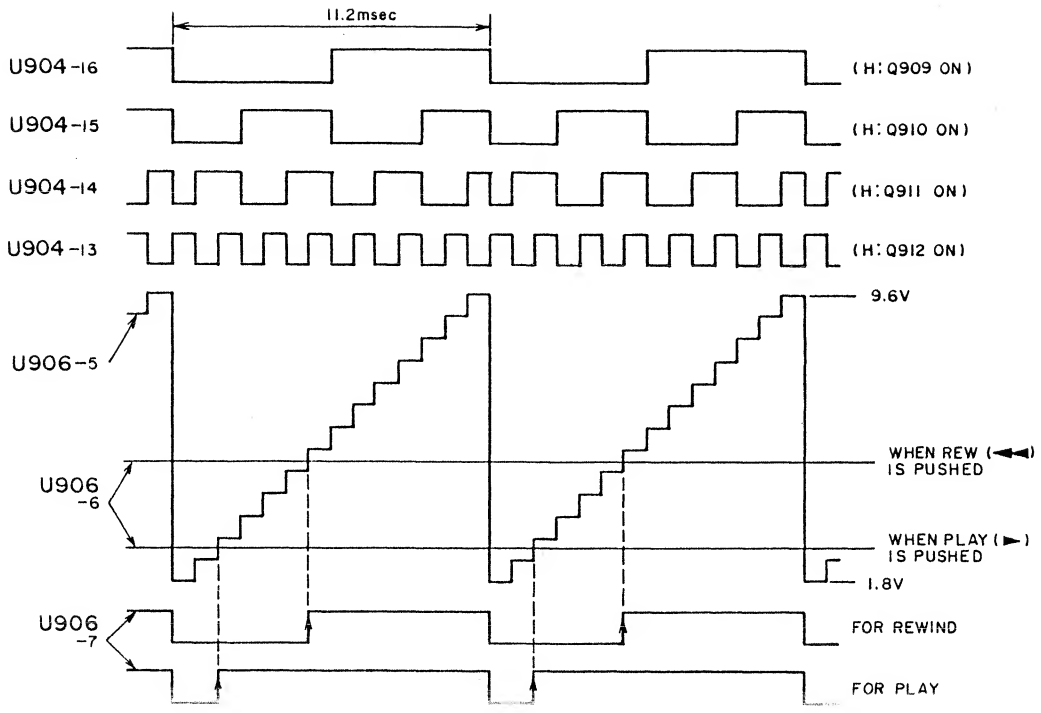

Fig. 5-3 Potential Chart

6. Cam and Motor Control

The mechanical operation is controlled by a cam, which is driven by the cam motor. The U902 cam motor control I.C. controls the direction of the cam motor rotation through the combination of Highs and Lows input from the mechanical microcomputer, U904, by way of the U903 unit.

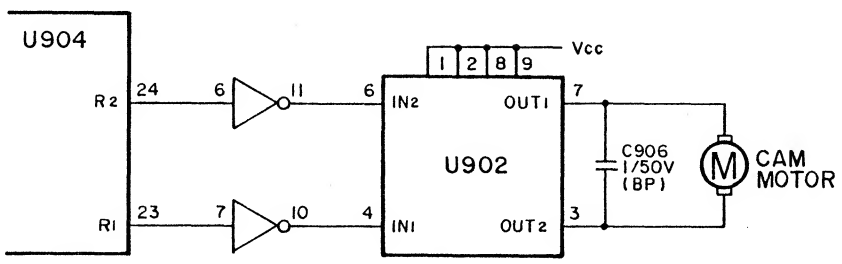

U904		U902				CAM MOTOR
R_1	R_2	IN_1	IN_2	OUT_1	OUT_2	
H	H	L	L	OFF	OFF	(No I.C. Operation)
H	L	L	H	H	L	Normal rotation
L	H	H	L	L	H	Reverse rotation
L	L	H	H	L	L	Brake

Fig. 6-1 Cam Motor Control

The cam is driven by the cam motor. Two oscillators are used to determine if the cam has reached the target position or not. (Fig. 6-2). OSC-2 is the cam interrupt oscillator, with a frequency of 500Hz, and a time of 2.0 mseconds. OSC-1 is the cam position oscillator, and is a voltage controlled oscillator (VCO) controlled by the volume coupled to the cam.

When the cam rotates, the output frequency of OSC-1 changes, and that changed frequency is detected by U904 to determine the cam position.

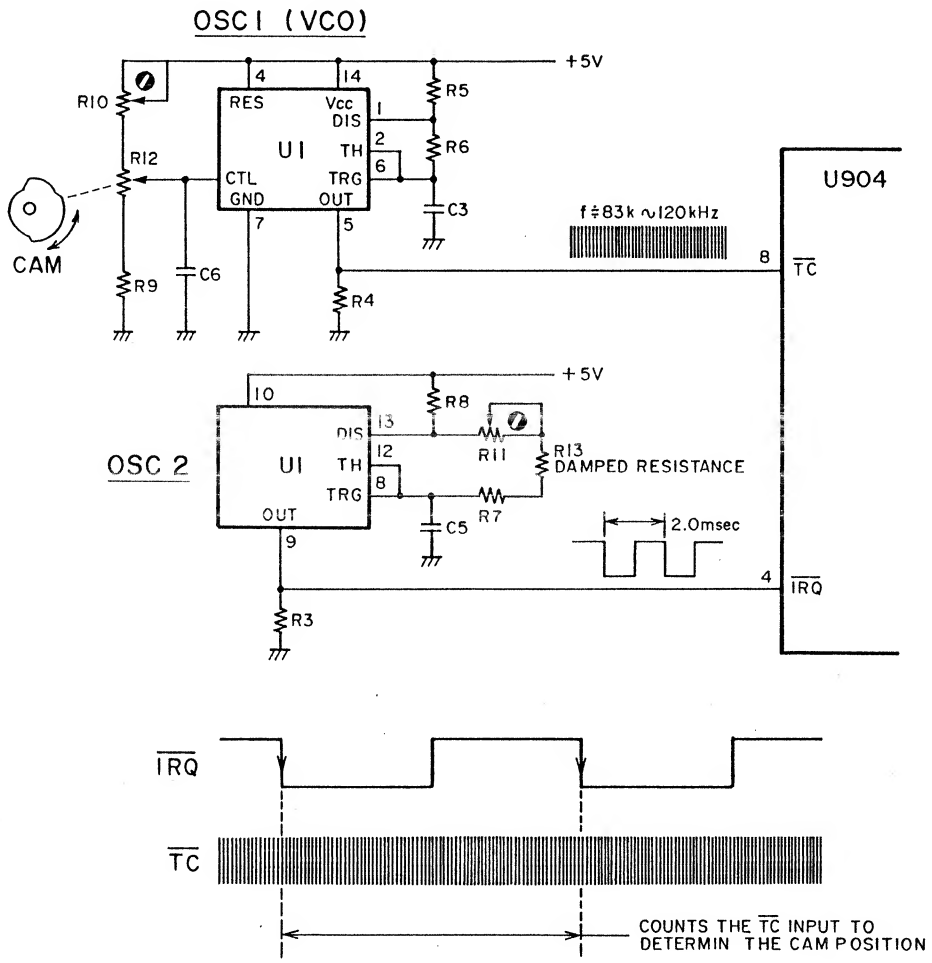

Fig. 6-2 Cam Control and Detection Circuit

7. Timer

The output of the cam interrupt oscillator, in other words, the clock of the $\overline{IRQ}$ pin of U-904, is taken as reference, and sets the following timers as shown below.

Timer name	Standard time	Function
POWER ON WAIT	2.5 sec	This timer is used for timed recording and such, so that even if the power is on and a play command is received, the unit will not operate until the microphone amplifier V_{CC} is detected. This is the time from the receipt of the play and timer switch. The actual time until the mechanism operates and begins timed recording or play is the power on switch + the power on wait, or about 3.5 seconds.
POWER ON SW	0.97 sec	This is the time after power on when all switches can be received, except for the CPS switch.
POWER ON FL TUBE	0.49 sec	This is the time needed to operate the FL meter display after the power is turned on. The cam servo also begins to operate after this time.
EJECT HOLD	0.28 sec	When a cassette is present, and the eject switch is pressed, this is the time until the cam stops at the eject position.
AMP MUTE	67 msec	This is the rise and fall time for the bias oscillator. It is the time it takes for the play mute to be cancelled after the head and the tape contact.
REC MUTE	3.9 sec	This is the record mute time.
CPS START	106 msec	This is the activation time for the scan and CPS_{FF} Function, when the music signal is not checked.
SCAN	10 sec	Play time during scan.
END STOP	1.2 sec	This is the tape end detect time.
SW HOLD	20 msec	This is the minimum hold time for a function input signal.

8. CPS and Intro Check

The CPS, or Computomatic Program Search, is divided into the CPS_{FF}, which searches out tracks ahead of the present position, and the CPS_{REW}, which searches out tracks behind the present position.

The intro check automatically creates a CPS count of '1' in the CPS_{FF} mode, searches out the first track, plays the first 10 seconds, and continues the process.
In this case, though, the 'CPS 1' is processed inside the microcomputer, so the CPS counter display remains at '0'. The CPS detection circuit is as shown in figure 8-1.

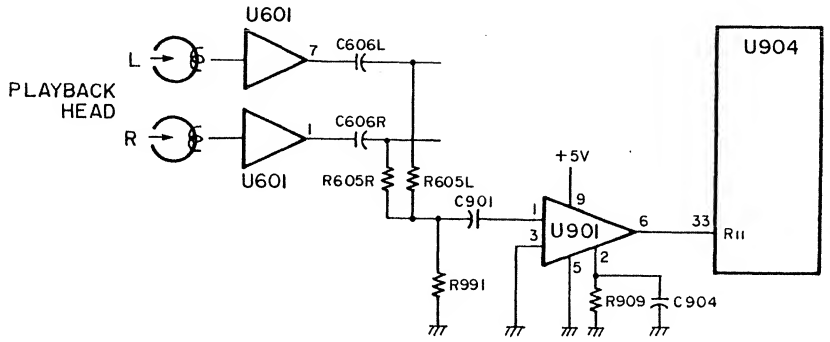

Fig. 8-1 CPS Detection Circuit

8-1. CPS_{FF} (Intro Check)

In the CPS_{FF} mode the start of each track is detected, and the CPS counter is reduced by one each time. However, no track starts are detected within the first 0.1 seconds after the start of CPS_{FF}. In addition, if CPS_{FF} is started from the middle of a track, that track is not counted. In figure 8-2 the current position is between E and F, and if the third track (D) is selected, the CPS_{FF} mode will detect each track start, and lower the count by 1 each time. When the count reaches zero, that is the beginning of track D. Assuming that the start point was to the right of point F, the start of track B would not be detected, and track D would be the second track ahead. Likewise, if the present position was to the left of E, track A's start would be detected, and the third track would be C.

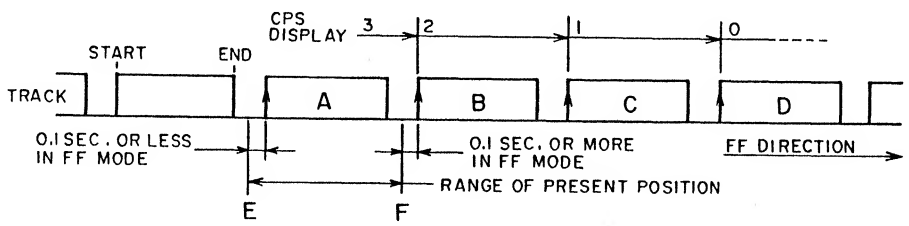

Fig.8-2 CPS_{FF} Example

8-2. CPS_{REW}

During CPS_{REW}, the start point of each track is detected, and the CPS counter is lowered by one for each start detected. Just as for CPS_{FF}, track starts within 0.1 seconds of the CPS_{REW} start point are not detected. The current position in figure 8-3 is from f to g. When the third track is selected, the CPS count is reduced by one for each track start detected, reaching 0 at the beginning of track d. If the present position is to the right of f, the start point of track a would be detected, and the third track will become c. If the present position is left of g, the start of track b will not be detected, and the third track will be track e.

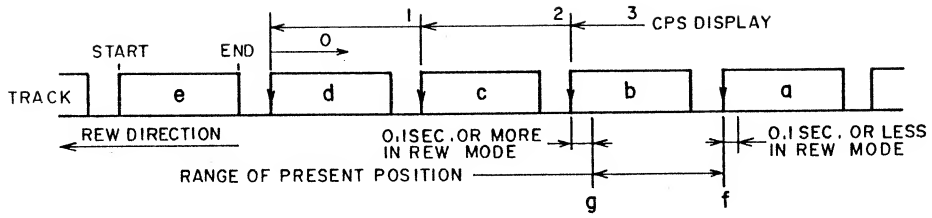

Fig.8-3 CPS_{REW} Example

8-3. Compensation for Tape Overtravel

In CPS_{FF} and CPS_{REW} the U-904 mechanical microcomputer issues a stop command when the CPS counter reaches '0'. Through inertial forces, though, the tape continues to travel beyond this point. This overtravel distance is compensated for by the following process.

Rotation pulses (4 pulses per revolution) from the right reel are input to the R_9 port, pin 31 of U904, which handles tape end and tape stop. When the CPS count changes from '1' to '0', U904 issues a stop mode signal, and counts the right reel pulses from that point until the tape stops moving. If that count is, for example, N, then the tape would only have to be rewound N pulses for CPS_{FF}, and N/2 pulses FF for CPS_{REW} compensation. After the compensation, the tape stops, and then begins play.

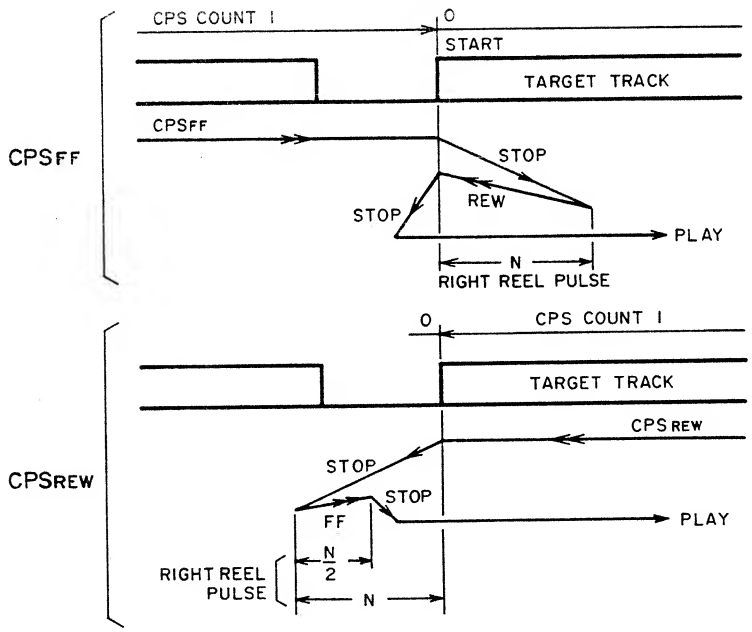

Fig.8-4 Overtravel Compensation

9. Multi-mode Counter

9-1 Tape Counter Mode

The count signal is produced by a photo-transistor which detects the left reel rotation. As shown in figure 9-1, the reel table has four holes in it, so that 4 pulses are produced for each revolution. These pulses are counted by the U905 key microcomputer to raise or lower the count by one digit for every two pulses detected.

9-2 Tape Remaining Time Counter Mode

U905 has already memorized varying data for different tape sizes and thicknesses. The U905 selects the needed tape running data based on the tape length signal (C-90, C-60, C-46L) from the key matrix and the metal tape detector signal from pin 42.

In addetion, it measures the revolution time of the left reel (average time for 4 pulses), and calculates the remaining time from the above data.

9-3 TRT Counter Mode

This mode signal is made up from the reference clock of the U905 key microcomputer.

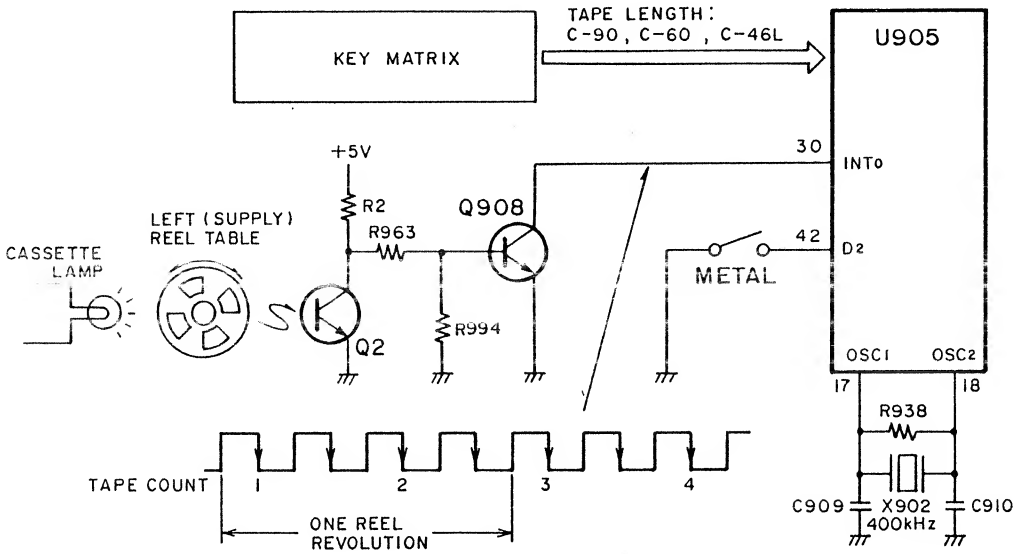

Fig. 9-1 Multi-Mode Counter Circuit

10. Audio Signal Path

10-1 NR System and Signal Path

dbx on...see figure 10-2.
dbx DISC on...see figure 10-3.
NR out, Dolby B, Dolby C.....
...see figure 10-4.

The signal path for NR OUT, Dolby B and Dolby C is the same, except for the decoding/encoding of the signal inside the Dolby decoder/encoder.

The operation of NR (Dolby) OUT, B, C are determined by the voltage applied to pin 27 of the Dolby I.C. The Dolby NR becomes OUT during auto-calibration.

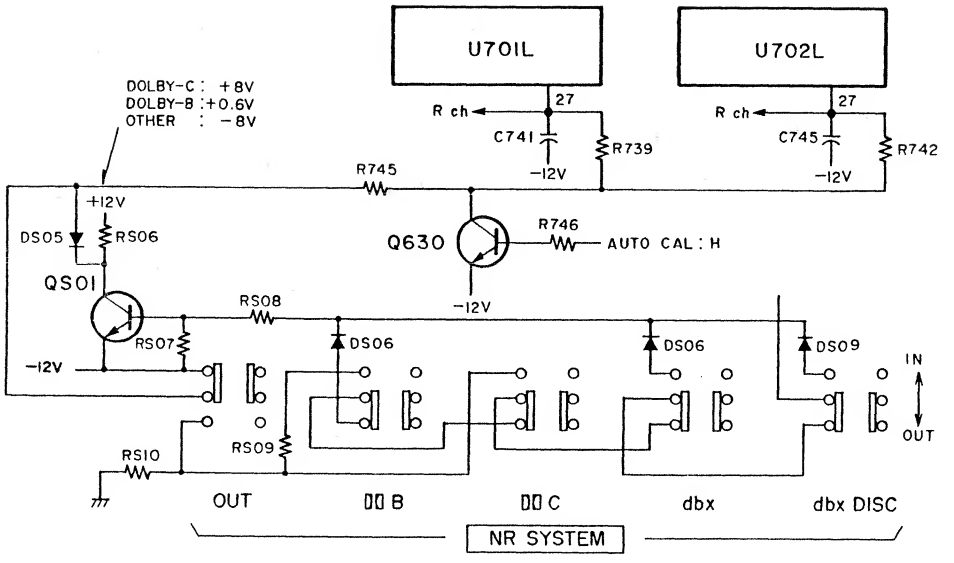

Fig. 10-1 NR System Circuit

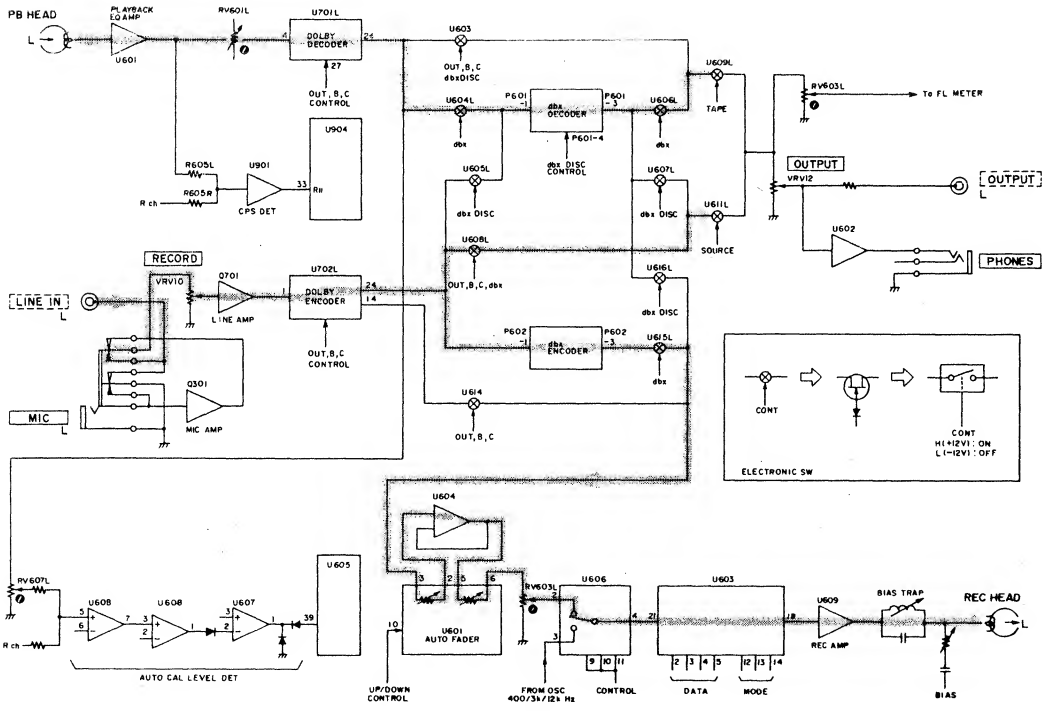

Fig. 10-2 V-900X Amplifier Block Diagram - dbx

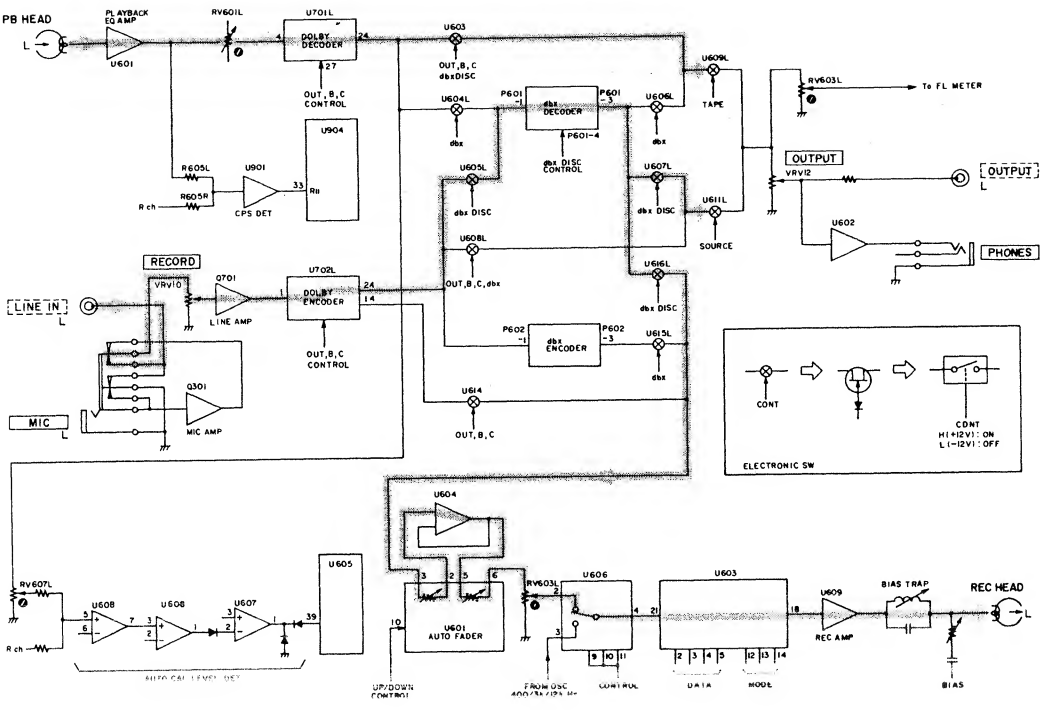

Fig. 10-3 V-900X Amplifier Block Diagram - dbx DISC

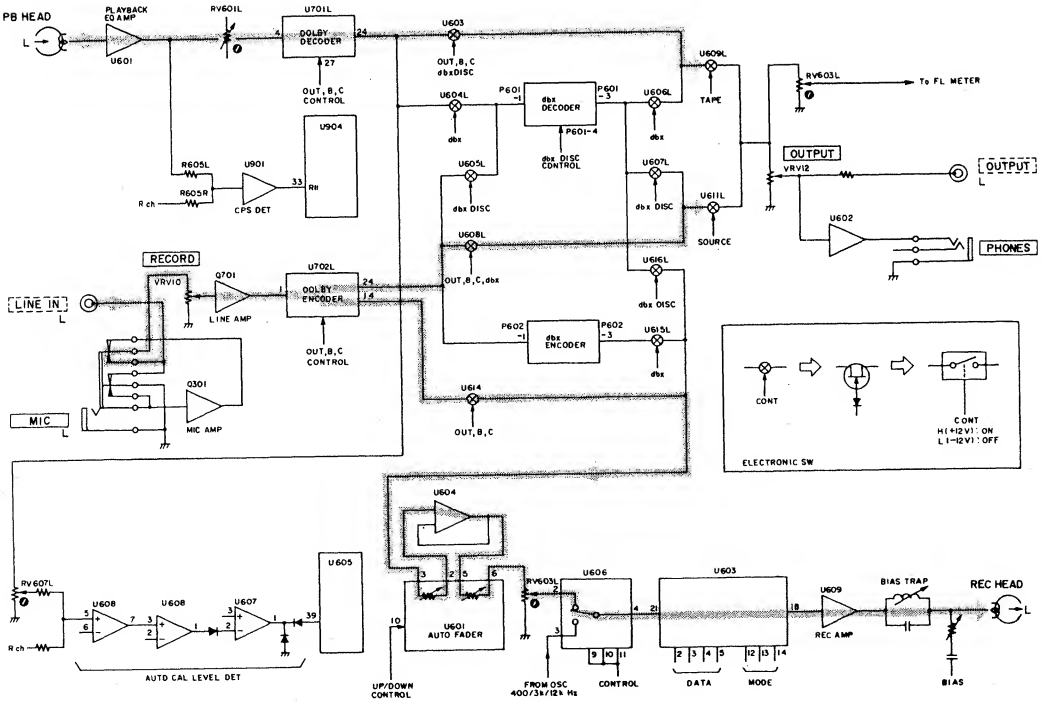

Fig. 10-4 V-900X Amplifier Block Diagram - NR OUT,Dolby B,C

10-2 Monitor Circuitry

Refer to figure 10-5. When the sync switch is turned on, the tape monitor is automatically cued for play and rec/play modes, and the source monitor is automatically cued for stop, FF, REW, pause, and rec/pause modes. REC MUTE, fade in/out, and auto calibrate are basically the REC/PLAY mode, and so are the tape monitor.

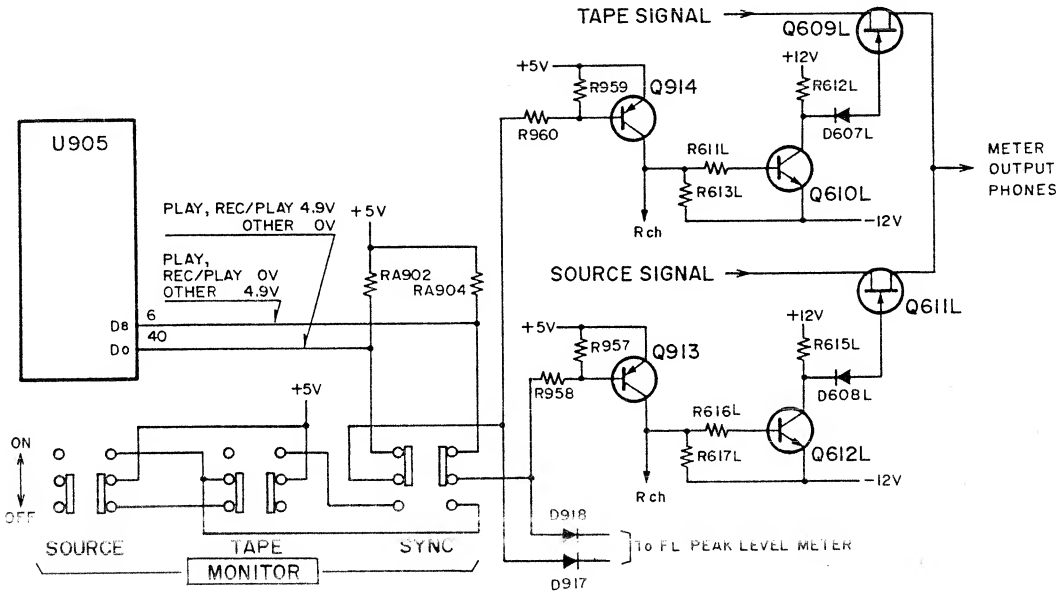

MONITOR SW	DECK MODE	D8	Do	Q913	Q914	Q610L	Q609L	Q612L	Q611L	MONITORING
SOURCE	—	—	—	OFF	ON	ON	OFF	OFF	ON	SOURCE
TAPE	—	—	—	ON	OFF	OFF	ON	ON	OFF	TAPE
SYNC	PLAY, REC/PLAY	L	H	ON	OFF	OFF	ON	ON	OFF	TAPE
	OTHER	H	L	OFF	ON	ON	OFF	OFF	ON	SOURCE

Fig. 10-5 Monitor Circuitry

11. Auto-fader

11-1 Out line

Refer to figure 11-1. Fade in/out is handled by the electronic attenuator U601, which is in turn controlled by the output signals from U605.

When the fade in (fade out) switch is pressed, U904 outputs the appropriate command to U605. After receiving this signal, U605 outputs a signal to light the fade in(out) LED from pin 1 (2), and outputs an up(down) Low-level signal from pin 7 (6). This up/down signal determines whether it is fade in or fade out, and also starts the internal oscillator of U601 for electronic attenuation.

The initial set signal is output from pin 5 of U605 (refer to 11-3). The oscillator pulses from U601 are input to pin 8 of U605, and when the pulses reach 34, U601 determines that the fade in/out is completed. U605 then sends a fade in finish (or rec mute) signal to U904.

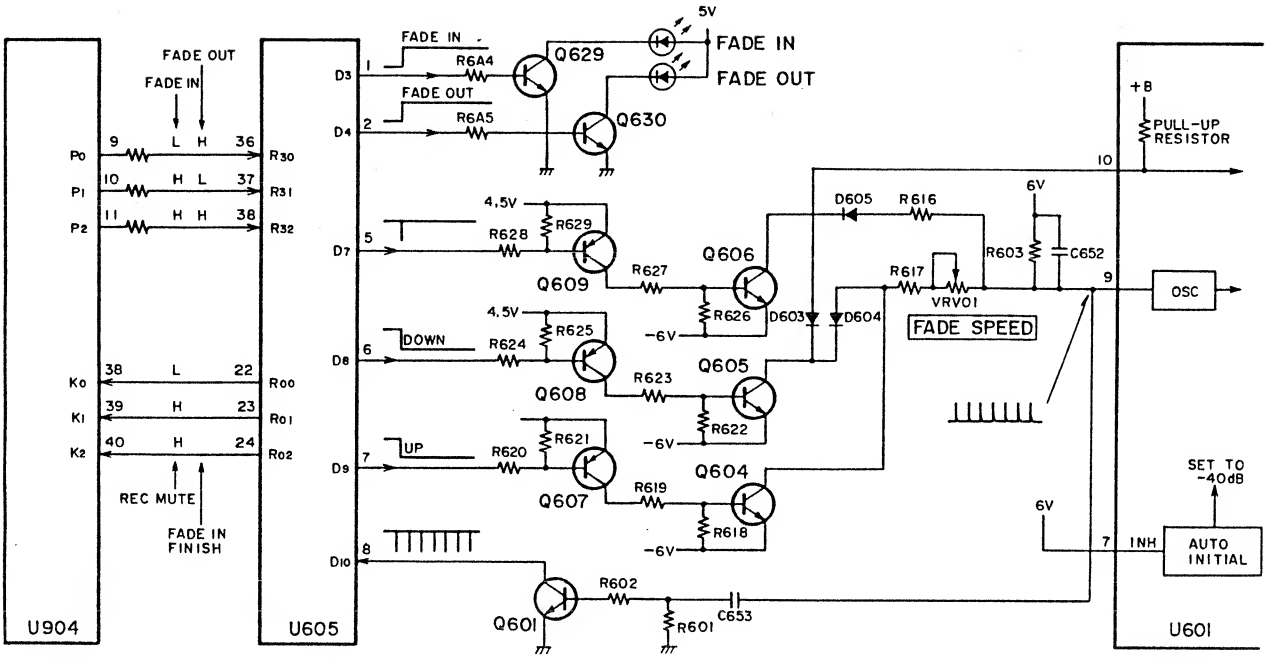

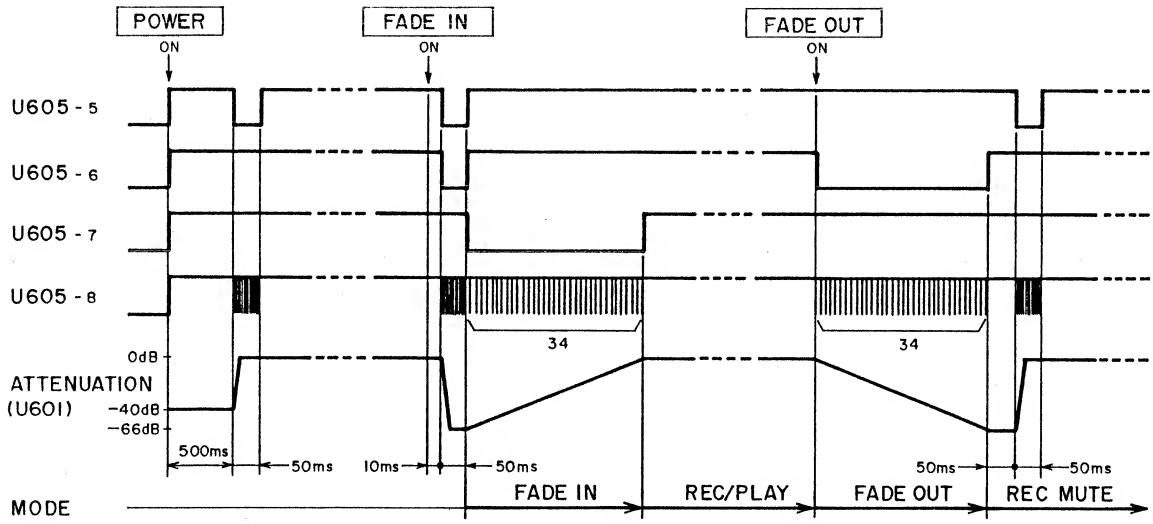

Fig. 11-1 Auto-fader Circuit

11-2 Electronic Attenuator

Figure 11-2 is a simplified block diagram of U601, and figure 11-3 is one of the attenuator.

The oscillator (clock) output is input to 2 two-way shift registers connected in cascade. The register data is output, received at a latch circuit, and changes the analogue switch. When pin 10 of U601 is High, fade in (up) occurs, and when Low, fade out (down) occurs.

The fade in/out stops when 34 oscillator outpulses are detected at U605. For example, in fade out, as the count goes from 1-33, attenuation is increased in 2dB steps from 0 to -66 dB, and attenuation becomes infinite at 34 (The -68 dB step is not operational).

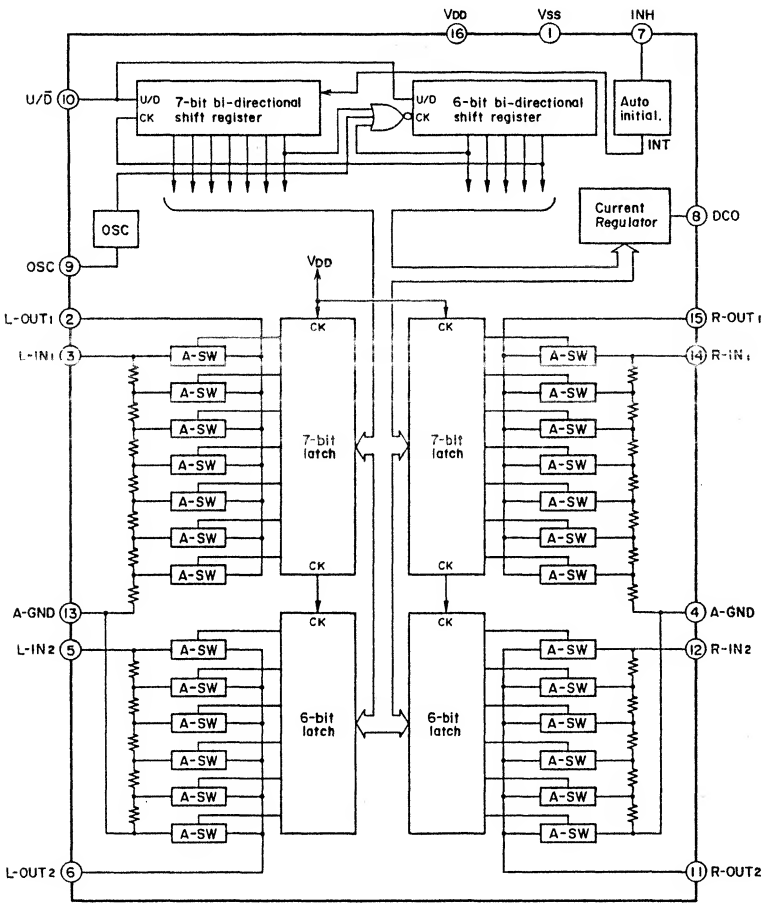

Fig. 11-2 TC9153P U601 Block Diagram

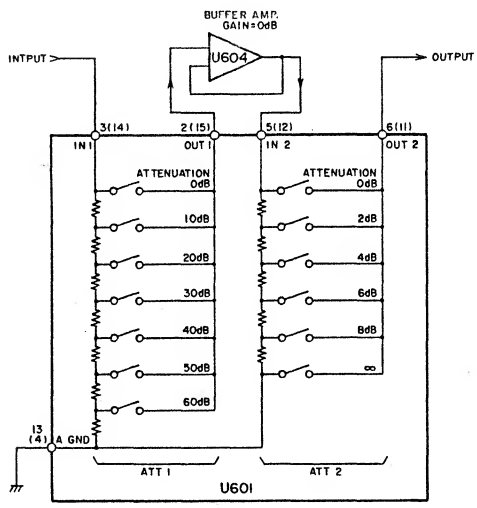

Fig. 11-3 U601 Attenuator Block Diagram

11-3 Initial Set

Pin 7 (INH) of U601 is set at High (+B) so that when it becomes Low it can stop U601 operation. However, if pin 7 is connected to +B the electronic attenuator will automatically preset to -40 dB at power on. To cancel that preset, and set attenuation to zere, the pin 5 output of U605 is used (refer to Fig. 11-1). About 0.5 seconds after the deck is turned on, a Low signal about 50ms in duration is output by pin 5 of U605. This signal turns on Q609 and Q606. When Q606 is turned on, U601's oscillator begins to oscillate. At that time, pin 10 of U601 is High through pull-up resistance, so the electronic attenuator begins fade in operetion. In addition, the time constant set by C652 and R616 is short, so the oscillator frequency is high, ending fade in operation at once, and setting attenuation to zero. This initial set signal is output both at the start of fade in and the end of fade out.

11-4 Fade in

When the fade in switch is pushed, a Low signal is output from pin 5 and pin 6 of U605 for about 50 mseconds. Refer to figure 11-1. This pin 5 signal causes Q609 and Q606 to go on, and starts the oscillator. At that time, the signal from pin 6 of U605 turns on Q608 and Q605, and pin 10 of U601 drops to Low, causing U601 to start fade out operation, and the electronic attenuator is set to infinite attenuation instantly. 50 mseconds later, pin 5 and pin 6 of U605 become High, and pin 7 becomes Low. The Low signal from pin 7 causes Q607 and Q604 to turn on, starting the oscillator. At that time pin 10 of U601 is High, so U601 starts fade in, and the electronic attenuator gradually runs from infinite, -66dB, -64dB,...0dB.

The fade speed control VRV01 controls the oscillator frequency. When the frequency is high, the fade speed is high, and when the frequency is low, the fade speed is slow. The oscillator frequency f_{OSC} is determined as follows:

$$f_{OSC}\ (Hz) = \frac{1}{0.7 \times (R617 + VRV01) \times C622}$$

11-5 Fade out

For fade out, a Low signal is output from pin 6 of U605, turning on Q608 and Q605. When Q605 goes on, pin 10 of U601 becomes Low, causing U601 to begin fade out. After 34 pulses are input to pin 8 of U605, pin 6 of U605 goes High, and sends a REC MUTE signal to U904 at the same time, placing the deck into record mute mode.

50 mseconds later, a 50 msecond long Low signal is output from pin 5 of U605, returning the electronic attenuator to 0dB instantly, just as for power on.

12. Auto Calibration

12-1 Circuit Composition

Refer to figure 12-1.

Pin 30 of U605 is the right reel pulse input. This is the counter input to return the tape to the auto-calibrate start position when auto-calibration is complete or when it is stopped during operation.

Pins 40, 41, 42, of U605 control the LED display. They output Highs to control the memo, ref, and auto LEDs, respectively.

Pins 36, 37, and 38 of U605 are the control data inputs, and input the auto-calibration commands.

Pins 22, 23, and 24 of U605 are the control data outputs. These pins output operational comands (REC/PLAY, FF, REW, STOP etc.)to the U904 mechanical computer during auto-calibration.

Pins 3 and 4 of U605 are the AF oscillator control signal outputs. There output the control for the frequency of the test signal oscillator in U602. When both pins are Low, the frequency is 400 Hz, when pin 3 is High it is 3kHz, and when pin 4 is High it is 12 kHz.

Pins 29, 28, 27, and 26 of U605 are the 4-bit data outputs, which output the data to indecate gain, EQ, and bias to U603.

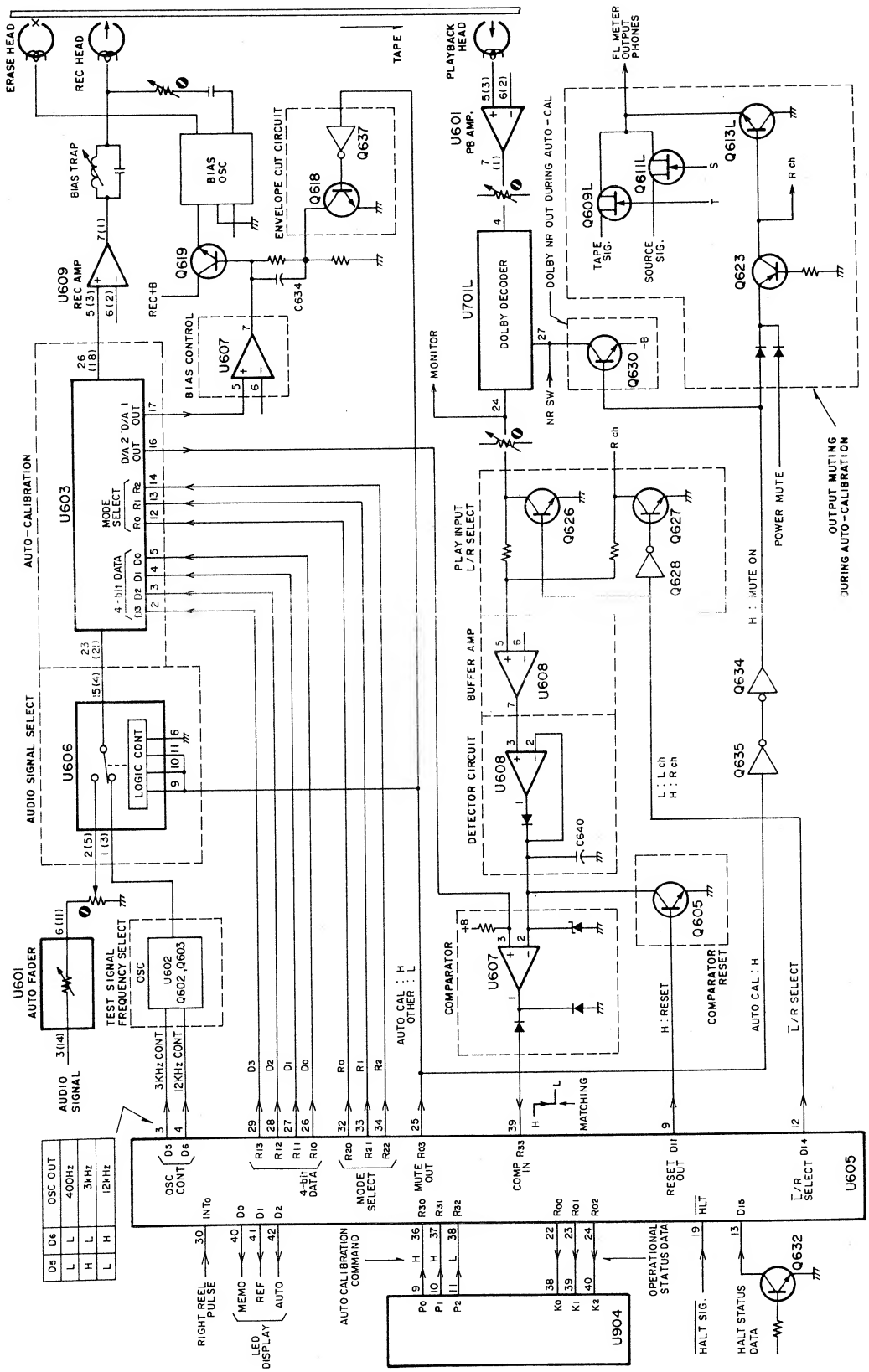

Fig. 12-1 Auto-Calibration Circuit

Pins 32, 33, and 34 of U605 are select data output pins.
These pins output selection data to determine if U603 checks the level, EQ, and bias, or whether to check the R or L channel.

Pin 25, U605 is the mute signal output, which operates as follows, outputting a High during auto-calibration: The U606 analogue switch is set to the test oscillator side; Q637 is turned on, turning off Q618.
To prevent noise from being recorded on the tape during record stop and start, a fixed envelope time is used for the bias frequency. For auto-calibration, however, bias must be changed rapidly, and so the envelope is cut out by turning off Q618.; The Dolby decoder is cut out during auto-calibration.; Muting is used on the monitor circuits (FL meter, output, phones) during auto-calibration.

Pin 39 of U605 is the comp input. The 4-bit data produced when the U607 comparator changes from High to Low becomes the data for level, EQ, and bias.

Pin 9, U605 is the comp reset output pin. When a High is output Q625 is turned on, and the charge of rectifier condenser C640 is discharged, resetting the U607 comparator circuit, and changing the output to High.

Pin 12 of U605 is the $\overline{L}$/R select output pin, which selects the play channel input to the comparator (Low is left, High is right).

Pin 13 of U605 is that HALT status signal.

Pin 19 of U605 is the $\overline{HALT}$ signal pin. When the deck power is turned off, the U605 stores its data in the RAM, cuts off all inputs and outputs, and enters HALT status. In HALT status, the clock oscillator stops, and data is maintained by the backup power supply (C657).

When deck power is turned off, Q632 goes off at once, pin 13 of U605 goes High, telling U605 that HALT status is in effect. U605 then processes data and inputs and outputs, and enters HALT when pin 19 goes Low.

Figure 12-2 shows the HALT circuitry, and figure 12-3 is the timing chart. Note that the circuitry has been altered from the chart shown in the service manual (3rd edition, April, 1984) to improve timing.

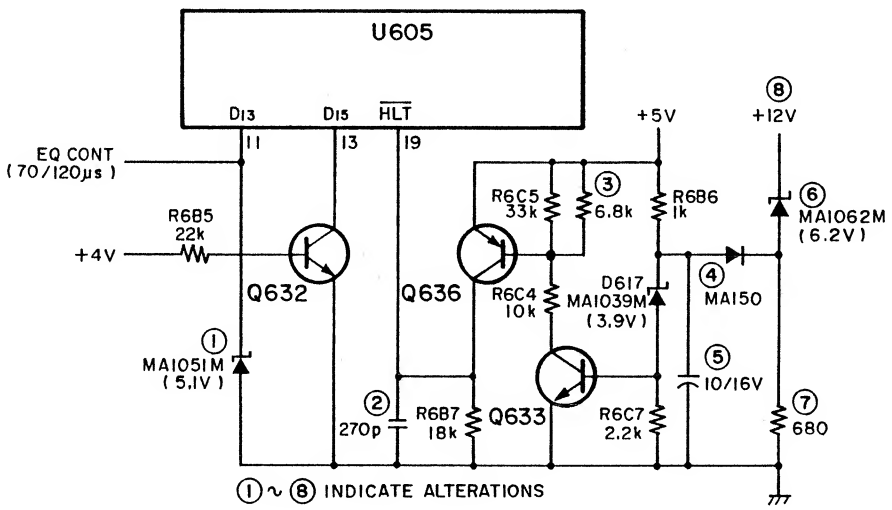

Fig. 12-2 HALT Circuitry

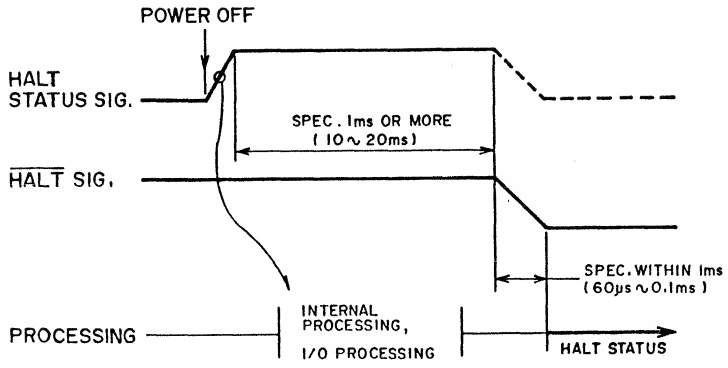

Fig. 12-3 Timing Chart for HALT

Pin 17 of U603 is the D/A 1 output. This is the bias control output pin, which outputs the 4-bit data in analogue form.

Pin 16 of U603 is the D/A 2 output, which supplies the reference level to the U607 comparator. This output is also converted to analogue from 4-bit data.

Pins 6-10 of U603 (not shown on figure 12-1)are condenser connection pins to maintain VCA, EQ and D/A 1 statuses.

The first half of the U608 is the buffer amplifier, and the second half is the rectifier (detector) circuit, which converts the play signal into DC signals.

12-2 Auto-calibration Process

The total process flow for auto-calibration is shown in figure 12-4. When auto-calibration is started, first a 400Hz signal is recorded on the right channel, which is played at the same time, allowing the level to be checked.

When the play output is normal, the level, EQ, and bias are calibrated, after which the tape is returned to the start position, completing the auto-calibration process.

If the play output is missing or low, the tape is advanced forward for 2 seconds, at which point the process is repeated. If the play level is normal, calibration is executed, and if it is not normal, auto-calibration is cancelled, and the tape is returned. If calibration is complete the auto LED will light, and if cancelled, the REF LED will light.

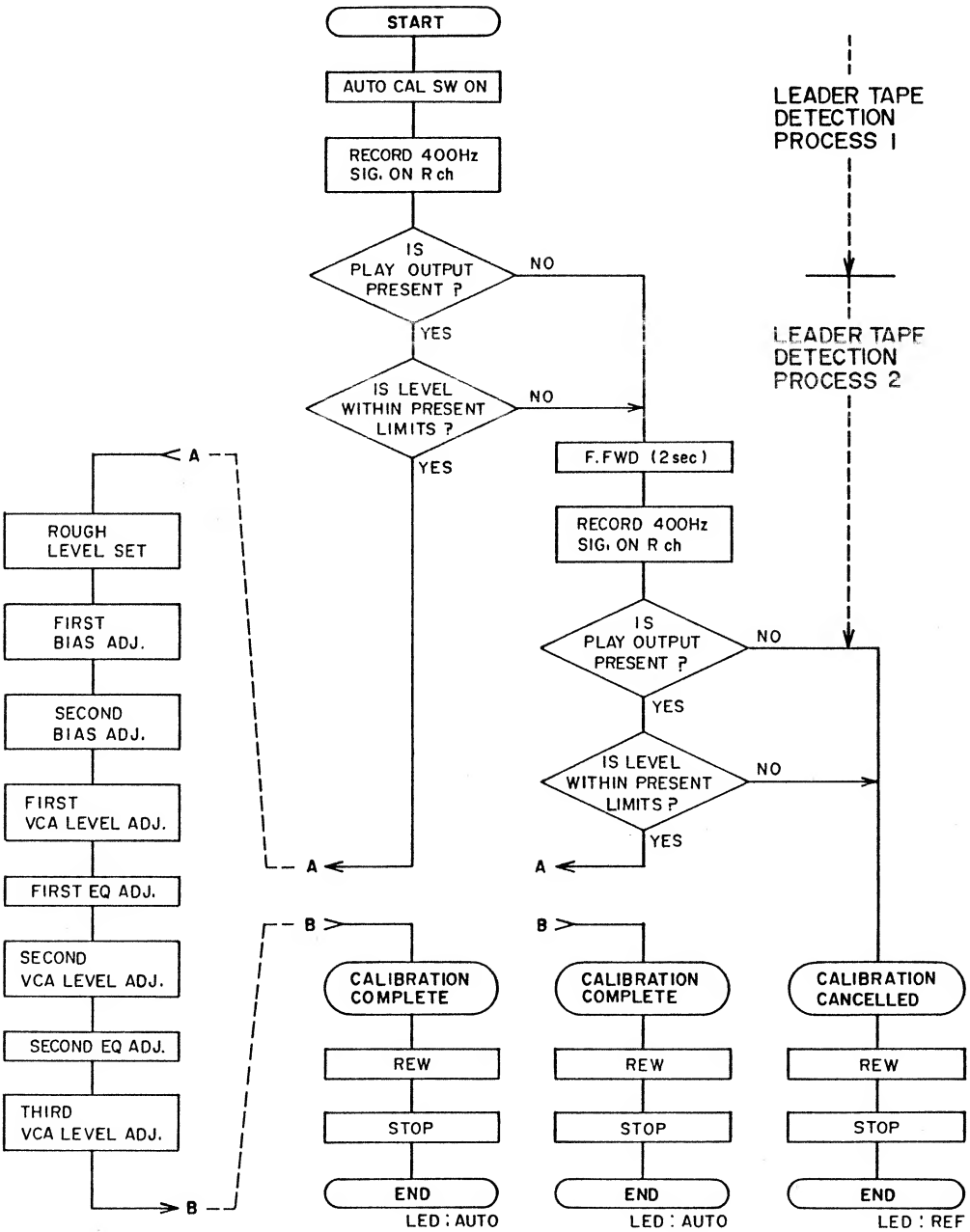

Fig. 12-4 Auto-Calibration Flowchart

12-3 Leader Tape Detection

When the auto-calibrate key is depressed and auto-calibrate is started, leader tape detection is performed as follows. Refer to figure 12-1 for the involved circuitry.

(1) The deck enters the REC/PLAY mode. The mute out of U605 goes High, switching the analogue switch of U606 to the oscillator side. Pins 3 and 4 of U605 both go Low, so the oscillator frequency is 400 Hz.

(2) For the first 10 mseconds, the mode select is 111, which discharges the hold condenser of U603, resetting the VCA L/R, the EQ L/R, and the D/A 1.

(3) After U603 is reset, data is repetitively sent from U605 to U603 in accordance with the leader tape detection data format showed in figure 12-5. Figure 12-6 shows the output formats. At that time, the VCA gain, EQ value and bias value are all set to a predetermined value by the 4-bit data, but the VCA gain of the right channel is set to maximum. Generally the amount of time needed to select a mode (EQ, VCA, D/A 1 bias), in other words, the time needed to supply the 4-bit data to a mode, is very short, but the data is maintained by the hold condenser connected to U603. As a result, the preset 400 Hz signal is output from pin 26 (18) of U603, as determined by the 4-bit data, and is recorded on the tape. The recorded signal is picked up at the play head.

	Mode select			4-bit data				Weight
	R_2	R_1	R_0	D_3	D_2	D_1	D_0	
EQ R	0	0	1	0	1	0	1	5
VCA R	1	0	1	1	1	1	1	15 (VCA GAIN · MAX)
VCA L	1	0	0	1	0	0	0	8
EQ L	0	1	0	0	1	0	1	5
D/A 1 (BIAS)	1	1	0	0	1	1	0	6

Fig. 12-5 Leader Tape Detect Data Format

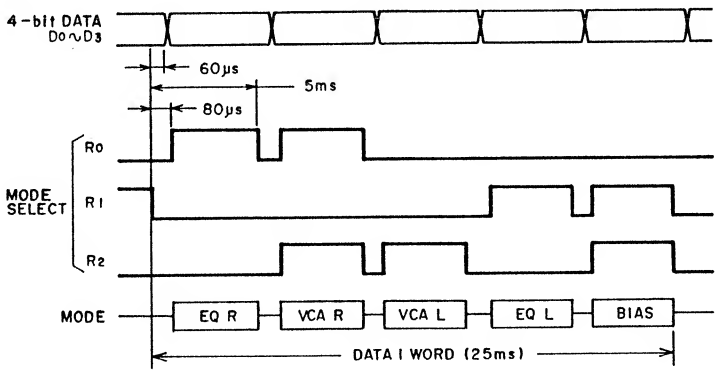

Fig. 12-6 Mode Selector Output Format

(4) The $\overline{L}$/R select signal (pin 12 of U602) is High, so right channel play is selected. The right channel play signal passes through the buffer amplifier, and the rectifier circuit, and charges into C640 at the appropriate DC voltage. At that time, the potential across pin 3 of the U607 comparator is about 0.9 volts, which means pin 2 has a higher potential, making that output on pin 1 Low (below referred to as comp in, as seen from the viewpoint of U605).

(5) About 1000 ms after the start of the leader tape detect mode, the reset output pin of U605 goes High for 150 ms, turning on Q625, and discharging C640. As a result, comp in changes from Low to High.

(6) Reset out returns to Low, and when Q625 goes off, C640 begins to charge again. When pin 2 of U607 exceeds pin 3's potential, the comp in becomes Low again. If the leader tape is not redorded, and has no output, then the potential of pin 2 does not rise, and comp in does not go Low.

If, after reset out becomes Low, comp in does not go Low within 400 ms, U605 determines that it is leader tape, and runs the tape forward fast for 2 seconds, and then performs leader tape detection again. (Figure 12-9).

(7) The process for the second leader tape detection is the same as for the first, but if the comp in does not become Low on the second time, auto-calibration is cancelled, the tape is rewound, and the unit stops. If auto-calibration is cancelled in midstream, the 4-bit data and the mode selector become the reference data format (see Fig. 12-12).

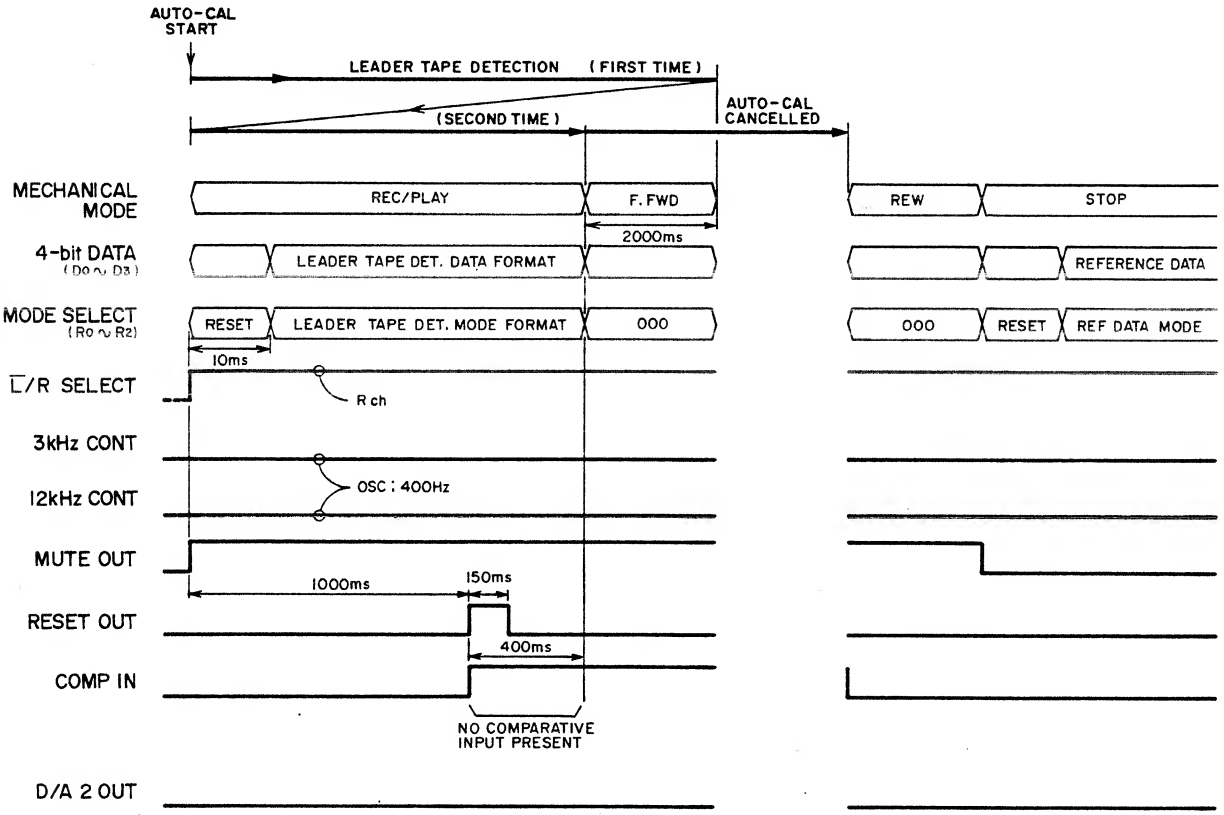

Fig. 12-7 Leader Tape Detection (1)

(8) After the reset out becomes Low in (6) above, if the comp in becomes Low within 400 ms, then it switches to comparative mode (refer to figures 12-8 and 12-9). This comparative mode checks if the recorded level is within the acceptable limits or not.

(9) In the comparative mode,D/A 2 is selected on U603 by the mode select signal, and the 4-bit data is converted to analogue (DC) signals by D/A 2, and applied to pin 3 of the U607 comparator.

(10) In the comparative mode, the values for VCA, EQ, and D/A 1 in U603 are maintained at the same as they were during leader tape detection mode by the hold condencer.
(11) The 4-bit data changes from 0000 to 1111, changing the D/A 2 output voltage from maximum to minimum.
(12) When 0000 4-bit data is detected, the potential of pion 3 exceeds that of pin 2 on U607, changing comp in from Low to High.
(13) In response to the changing 4-bit data, the potential of pin 3 of U607 falls in a step form, and when it drops below that of pin 2 (proportional to the play level DC potential), comp in changes from High to Low.
This change from High to Low (negative edge) is detected by U605, which determines if the recording level is within the acceptable range, and which moves to the next process (level adjustment) 5 ms later. (figure 12-10).

(14) After entering the comparative mode, if comp in does not go Low within 200 ms, U605 determines that there is a problem with the recording level, advances the tape FF 2 seconds, and performs the second leader tape detection.
(15) There are 2 possible reasons why the comp in cannot detect the negative edge in the comparative mode. The first is that the recording level is too low. If the tape sensitivity is extremely low, the potential of pin 3 will not drop below pin 2 even if the 4-bit data is 1111, and comp in remains High. The second possibility is that the recording level is too high. The VCA gain on the right channel is set to maximum during leader tape detection, and if the tape sensitivity is extremely high the potential of pin 3 might not exceed pin 2 even when the 4-bit data is 0000. As a result, comp in remains Low, and the negative edge is not detected.

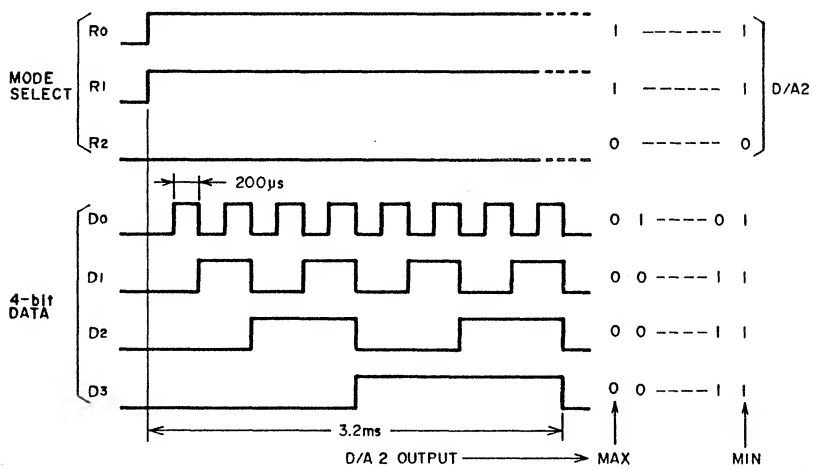

Fig. 12-8 Comparative Mode Data Format

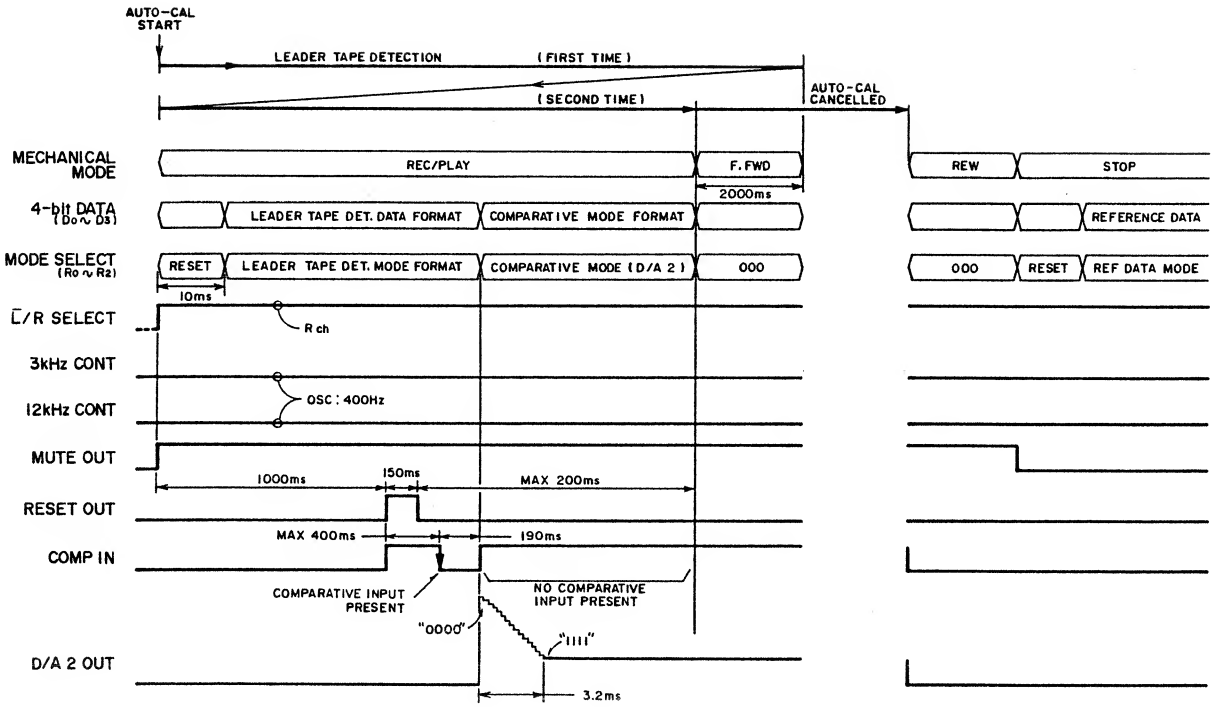

Fig. 12-9 Leader Tape Detection (2)

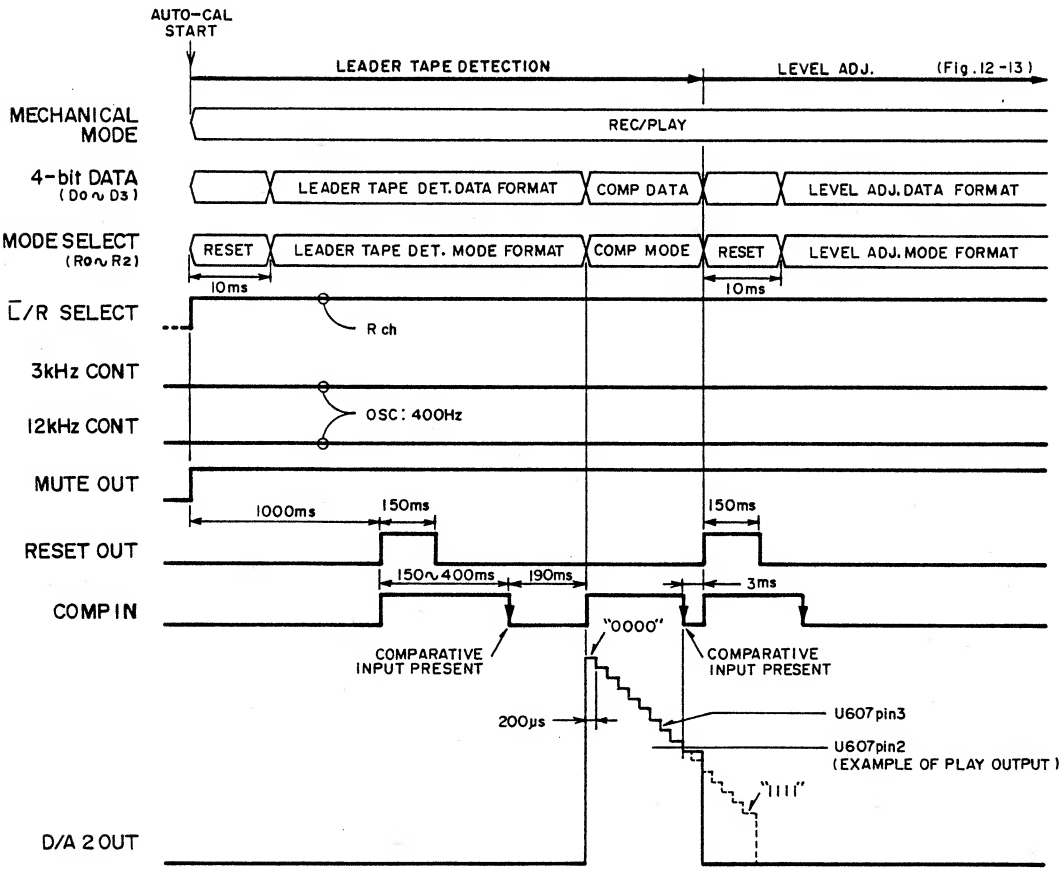

Fig. 12-10 Leader Tape Detection (Within preset level)

12-4 Level Adjustment (Rough)

Level adjustment is performed during the leader tape detection process. The data obtained during this adjustment is the rough data. Refer to the time chart in figure 12-13.

(1) The mode select enters reset mode for 10 ms., discharging the hold condenser of U603, resetting the data stored at tape detection.

(2) After reset, the 400 Hz, signal is recorded as per the level adjust data format (refer to figure 12-11). Note that for normal recording when not using auto-calibrate, VCA, EQ, and bias values are set by the reference data format.

(3) Next, as for leader tape detection, a 150 ms long reset out signal is output, and the unit enters the comparative mode 190 ms after the comp in detects the negative edge. This comparative mode also operates in the same way as the leader tape detection. After comp in becomes Low, there is a 190 ms delay, until the recorded signal is picked up by the play head (there is a physical distance to travel involved).

(4) When comp in of U605 detects the negative edge in the comparative mode, the rough level data is determined from the 4-bit data. First of all, the 4-bit data (BCD) is converted into base 10 numbers.

Data name	D_3	D_2	D_1	D_0
Weight	2^3	2^2	2^1	2^0
Data example	0	1	1	1

$$(0 \times 2^3)+(1 \times 2^2)+(1 \times 2^1)+(1 \times 2^0)$$
$$= 7 \text{ (decimal)}$$

(5) A rough data decimal is computed from this base 10 number, changed to BCD to produce the rough level data, and is used to adjust the bias and EQ. If this base 10 value is greater than 8, the rough decimal number is 8-(base 10 number - 8) = (16 - base 10 number). If 8 is greater than the bace 10 number, then the rough decimal is 8 + (8 - base 10 number) = (16 - base 10 number).

For example, if the comparative match 4-bit data is 1001 '9', the rough level data will become 0111 '7'.

(6) 3 ms after the comp in detects the negative edge in the comparative mode, it shifts to bias adjustment.

	Mode select			4-bit data				Weight
	R_2	R_1	R_0	D_3	D_2	D_1	D_0	
EQ R	0	0	1	0	1	0	1	5
VCA R	1	0	1	0	1	1	0	6
VCA L	1	0	0	0	1	1	0	6
EQ L	0	1	0	0	1	0	1	5
D/A 1 (BIAS)	1	1	0	0	1	1	0	6

Fig. 12-11 Level Adjustment Data Format

	Mode select			4-bit data				Weight
	R_2	R_1	R_0	D_3	D_2	D_1	D_0	
EQ R	0	0	1	0	1	1	0	6
VCA R	1	0	1	0	1	1	0	6
VCA L	1	0	0	0	1	1	0	6
EQ L	0	1	0	0	1	1	0	6
D/A 1 (BIAS)	1	1	0	0	1	1	0	6

Fig. 12-12 Reference Data Format

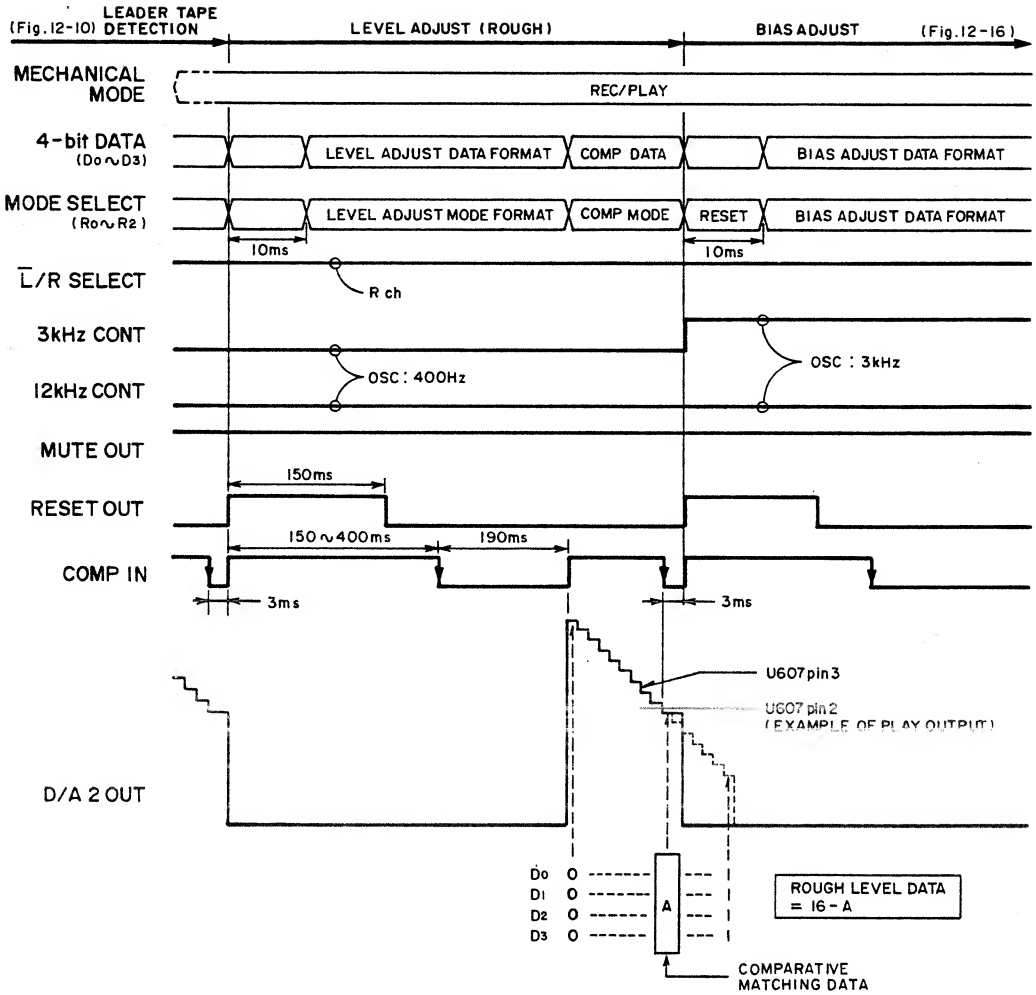

Fig. 12-13 Level Rough Adjustment

12-5 Bias Adjustment

Refer to figures 12-14 to 12-16. For bias adjustment, the 4-bit data (D/A 1) is changed one step at a time from 0000 to 1111, or 1111 to 0000, and the recording level is checked at each level, adjusting the bias value each time. Adjustment takes about 8 seconds to perform (250 ms x 32 steps).

(1) The 4-bit data (D/A 1) is changed one step at a time from 1111 (minimum bias) to 0000 (maximum bias), and the recording level is checked in the comparative mode each step. The minimum comparative data is held, yeilding the minimum comparative data (maximum recording level). The 4-bit data at that point (bias value) is termed data A.

(2) The 4-bit data (D/A 1) is shifted 1 step at a time from 0000 (maximum bias) to 1111 (minimum bias), yeilding data B through the same process.

(3) The bias data is computed using A and B values:

$$\text{bias data} = \frac{A + B}{2} - 1$$

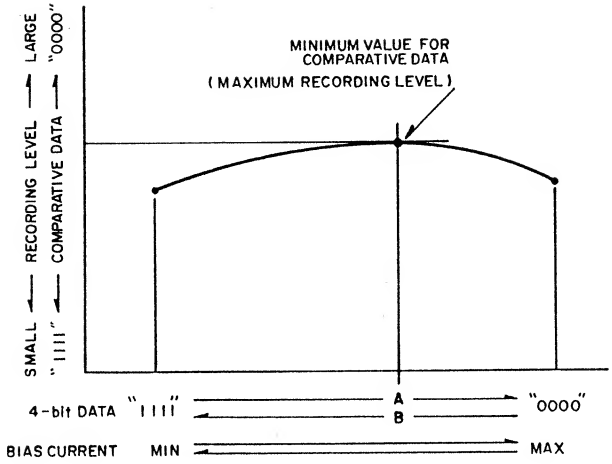

Fig. 12-14 Bias Adjustment

	Mode select			4-bit data				Weight
	R_2	R_1	R_0	D_3	D_2	D_1	D_0	
EQ R	0	0	1	0	1	0	1	4
VCA R	1	0	1	*1				-
VCA L	1	0	0					
EQ L	0	1	0	0	1	0	1	4
D/A 1 (BIAS)	1	1	0	*2				-

*1: Data determined by rough level adjust.
*2: 0000⇄1111 changes one step at a time.

Fig. 12-15 Bias Adjust Data Format

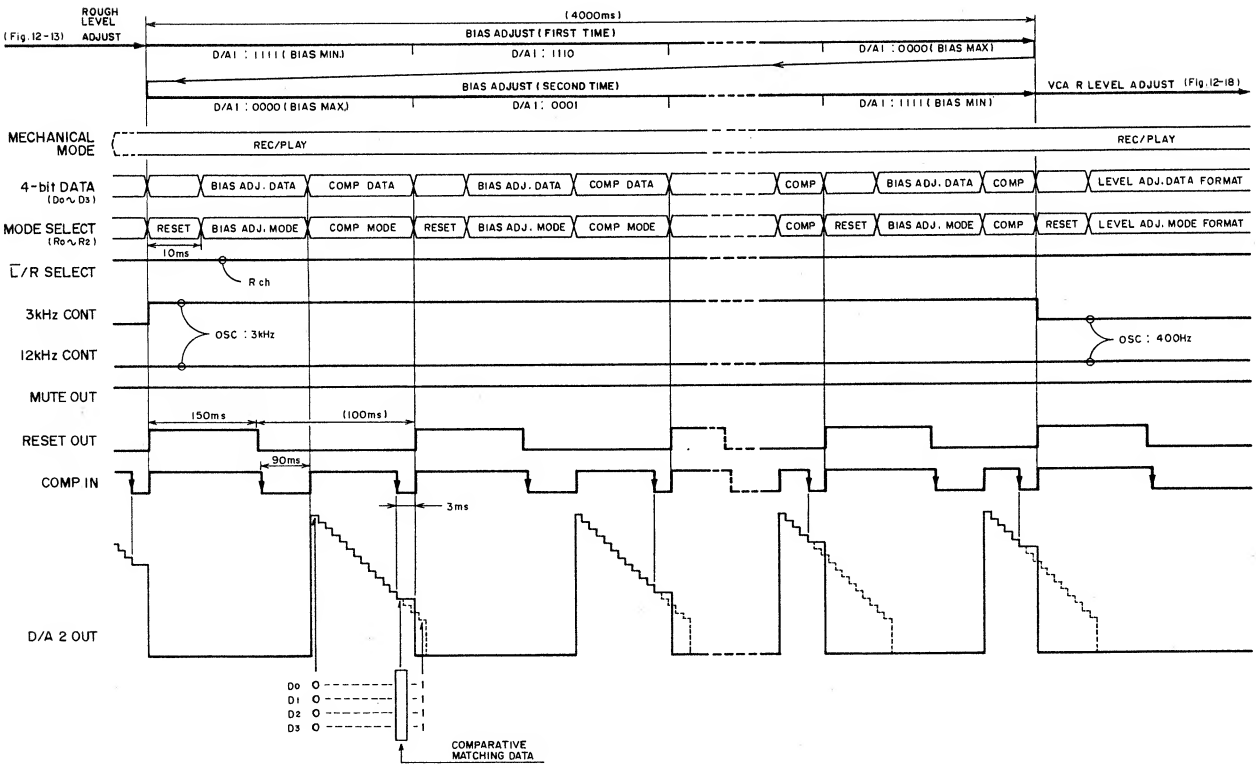

Fig. 12-16 Bias Adjustment

12-6 VCA Level Adjustment

VCA level adjustment is performed a total of three times after the completion of bias adjustment in the order VCA (R,L), EQ(R,L), VCA(R,L), EQ(R,L), VCA(R,L). Except for the fact that the data formats are different, the method is the same as described in 12-4 for rough level adjustment.

The data format is shown in figure 12-17, and the timing chart is figure 12-18. The auto-calibration process ends after the third VCA level adjustment, and the tape rewinds back to the start position, entering the REC/PAUSE mode.

	Mode select			4-bit data			
	R_2	R_1	R_0	D_3	D_2	D_1	D_0
EQ R	0	0	1	*3			
VCA R	1	0	1	*2			
VCA L	1	0	0	*2			
EQ R	0	1	0	*3			
D/A 1 (BIAS)	1	1	0	*1			

*1 Fix data received during bias adjust.

*2 First time: data gained during right channel rough level adjustment is used on both channels.
Second time: right and left channel data gained from the first VCA level adjust is used.
Third time: right and left channel data gained during the second VCA level adjust is used. Data gained during; the third time is fixed.

*3 First time: both left and right channels use '0101 (weight 5).
Second time: right and left channel data gained during the first EQ adjust is used. Data gained during the second time is fixed.

Fig. 12-17 VCA, EQ Adjust Data Formats

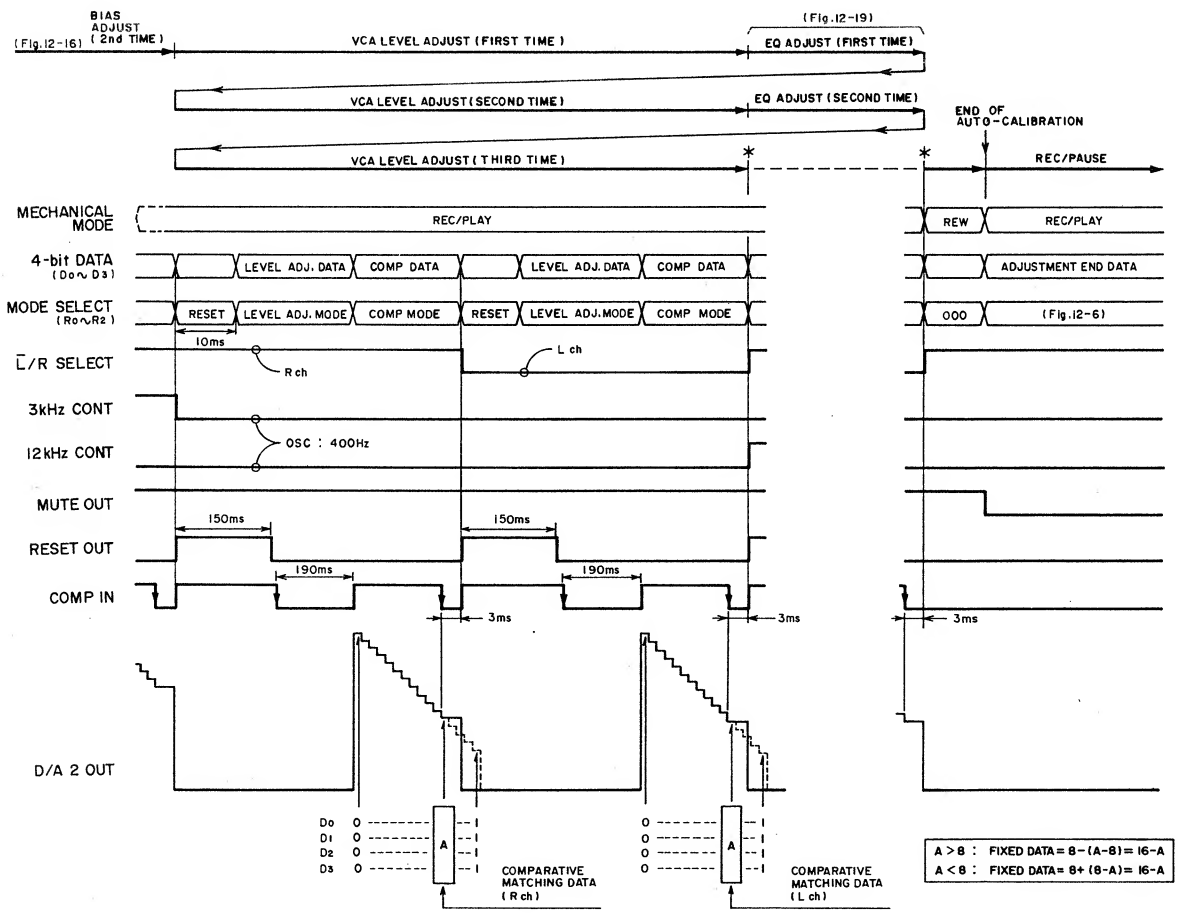

Fig. 12-18 VCA Level Adjustment

TEAC SCHEMATIC DIAGRAM (AUTO CAL.) V-900X

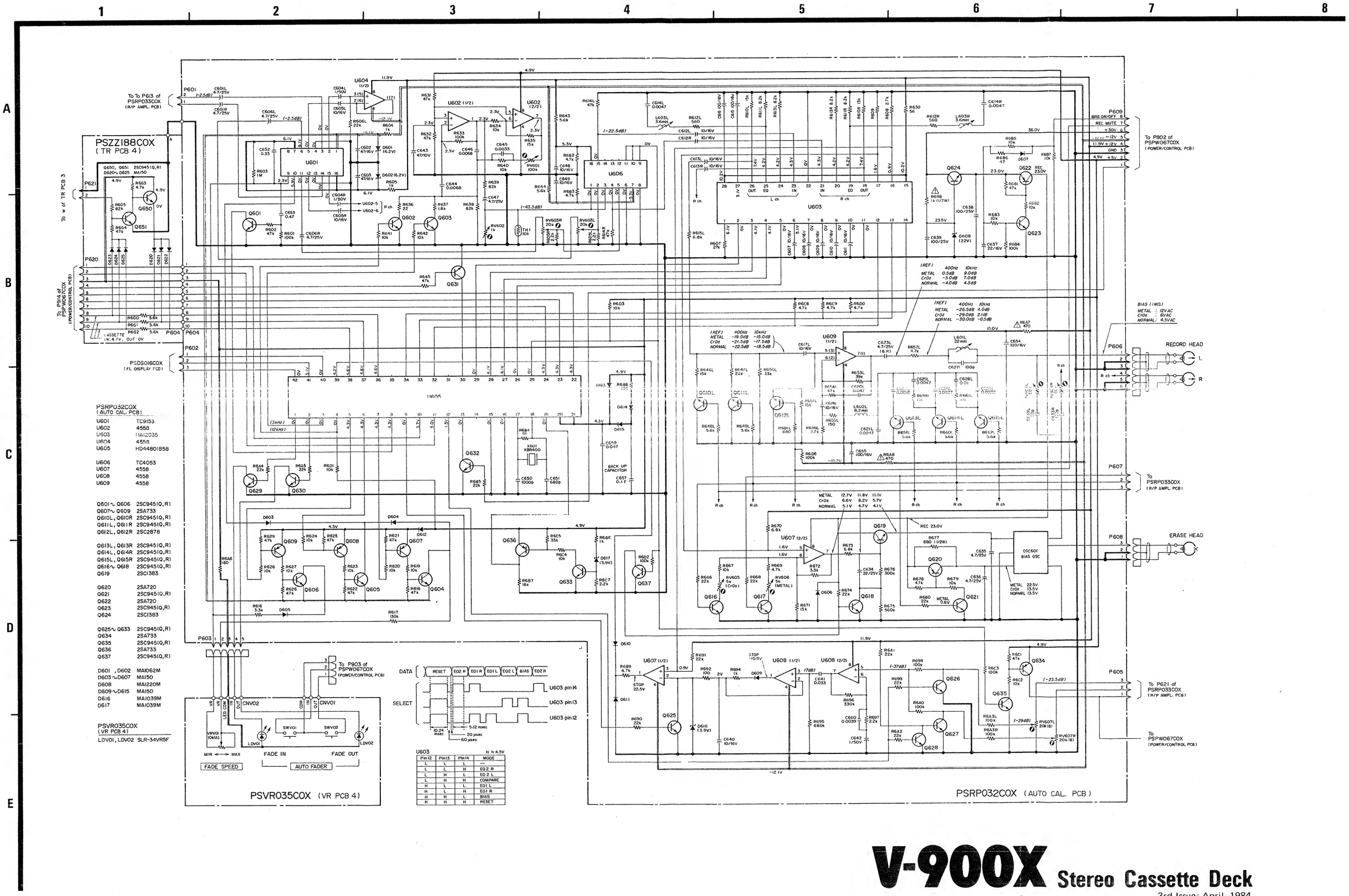

V-900X Stereo Cassette Deck

3rd Issue; April, 1984

TEAC WIRING DIAGRAM V-900X

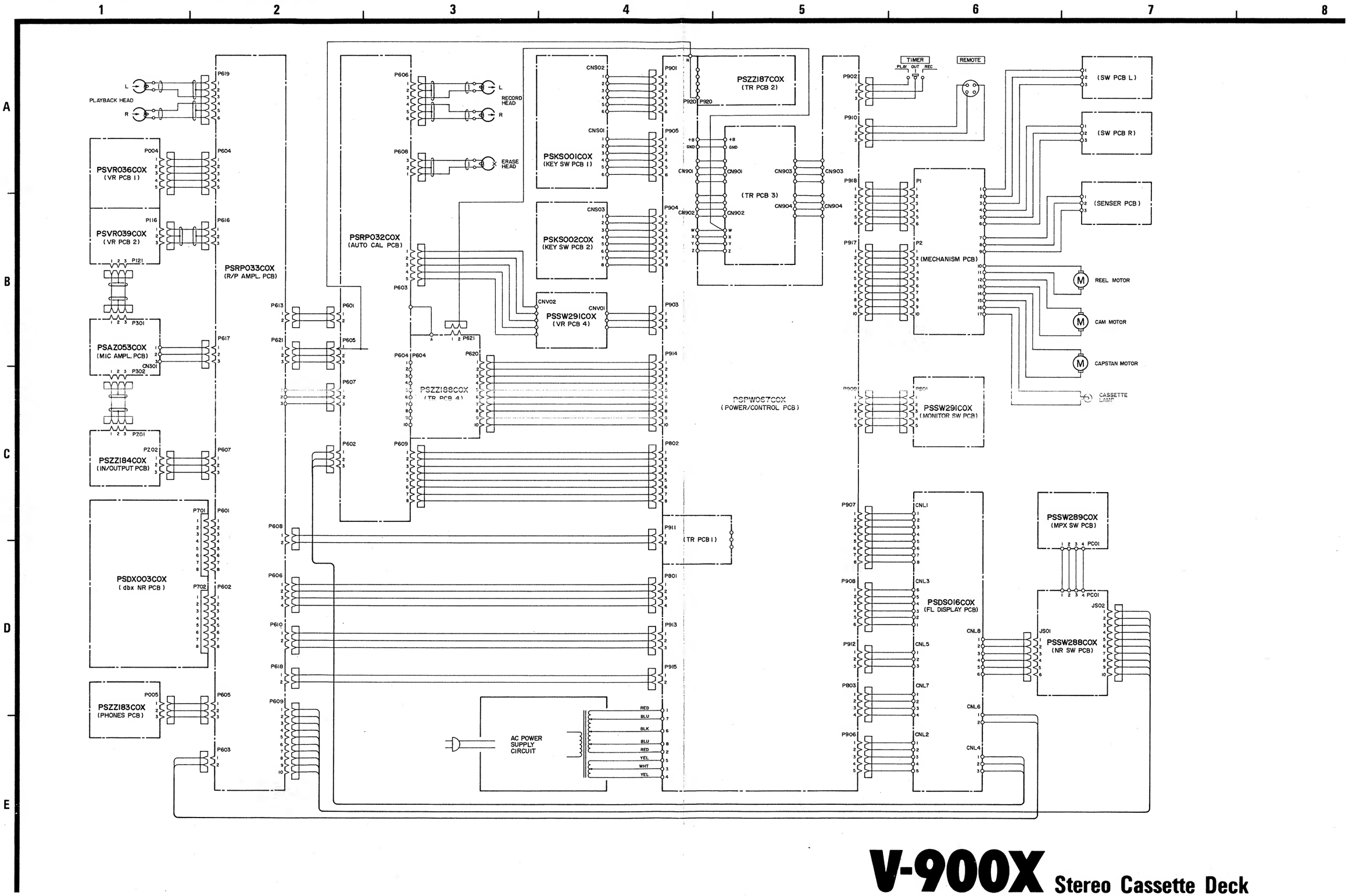

V-900X Stereo Cassette Deck

3rd Issue; April, 1984

POWER/CONTROL PCB ASSY (V-900X)

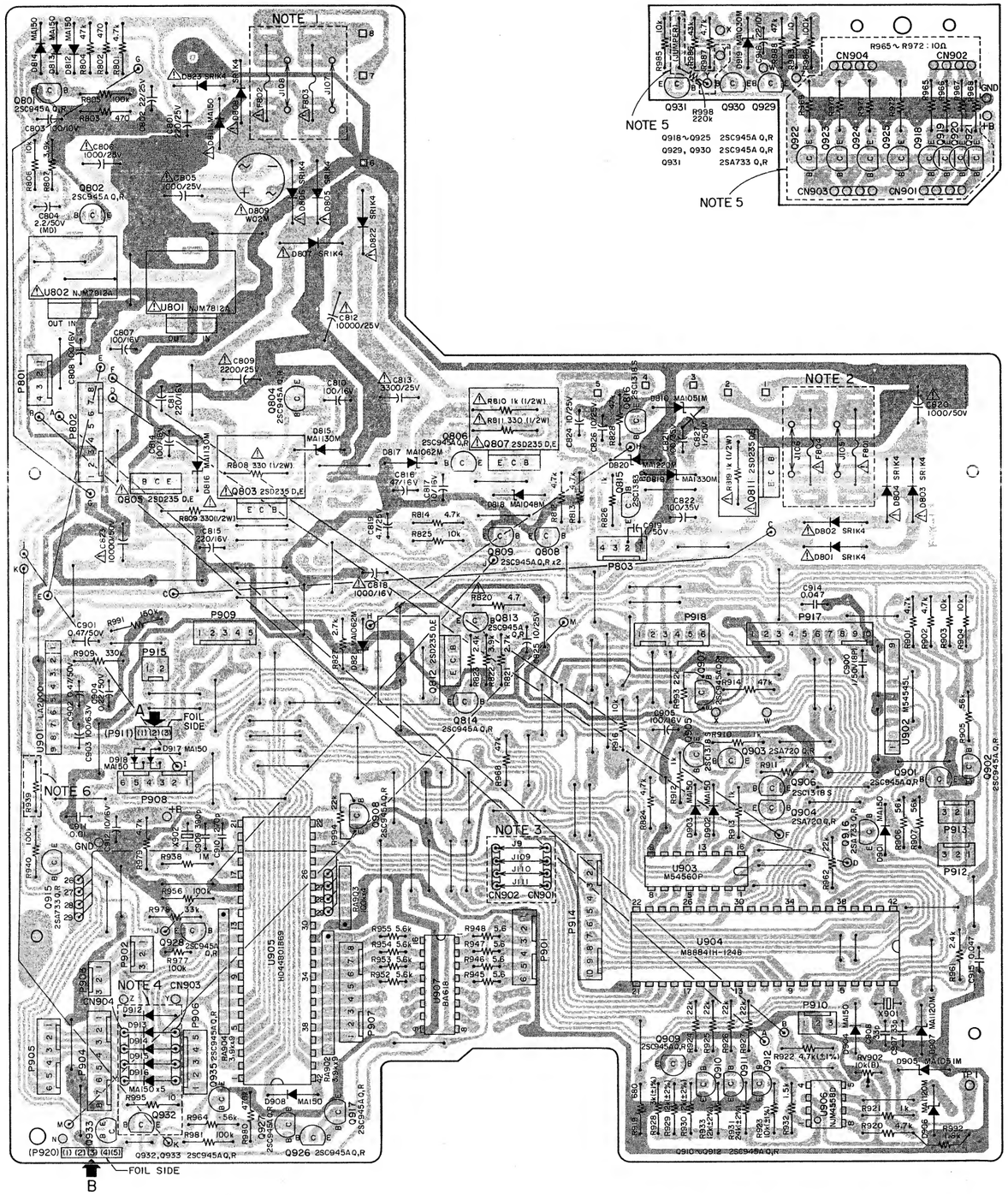

TR PCB 3 ASSY (V-900X)

		EUROPE, U.K.	OTHER
NOTE 1	F802	1.6AT	J108 (Shorting)
	F803	1.6AT	J107 (Shorting)
NOTE 2	F804	0.5AT	J106 (Shorting)
	F801	0.5AT	J105 (Shorting)

	Serial No.	10001 ~ 20000	20001 ~
NOTE 3	J9 J109 ~ J111	Open	Shorting
NOTE 4	D912 ~ D916	Not mounted	Mounted
	Q932, R995	Mounted	Not mounted
NOTE 5	CN901 ~ CN904	Connected	Not connected
	Q918 ~ Q925 R965 ~ R972	Mounted	Not Mounted
	(Connection)	Y	Y'
	R998	Not mounted	Mounted
	(JUMPER)	Shorting	Open
NOTE 6	R939	5.6kΩ	47kΩ
NOTE 7	C917	22μF/16V	0.47μF/50V(KS)
	R997	Shorting	470kΩ

TR PCB 1 ASSY (V-900X)

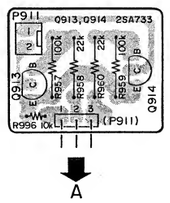

TR PCB 2 ASSY (V-900X)

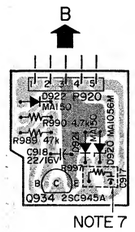

POWER/CONTROL PCB ASSY (V-800X)

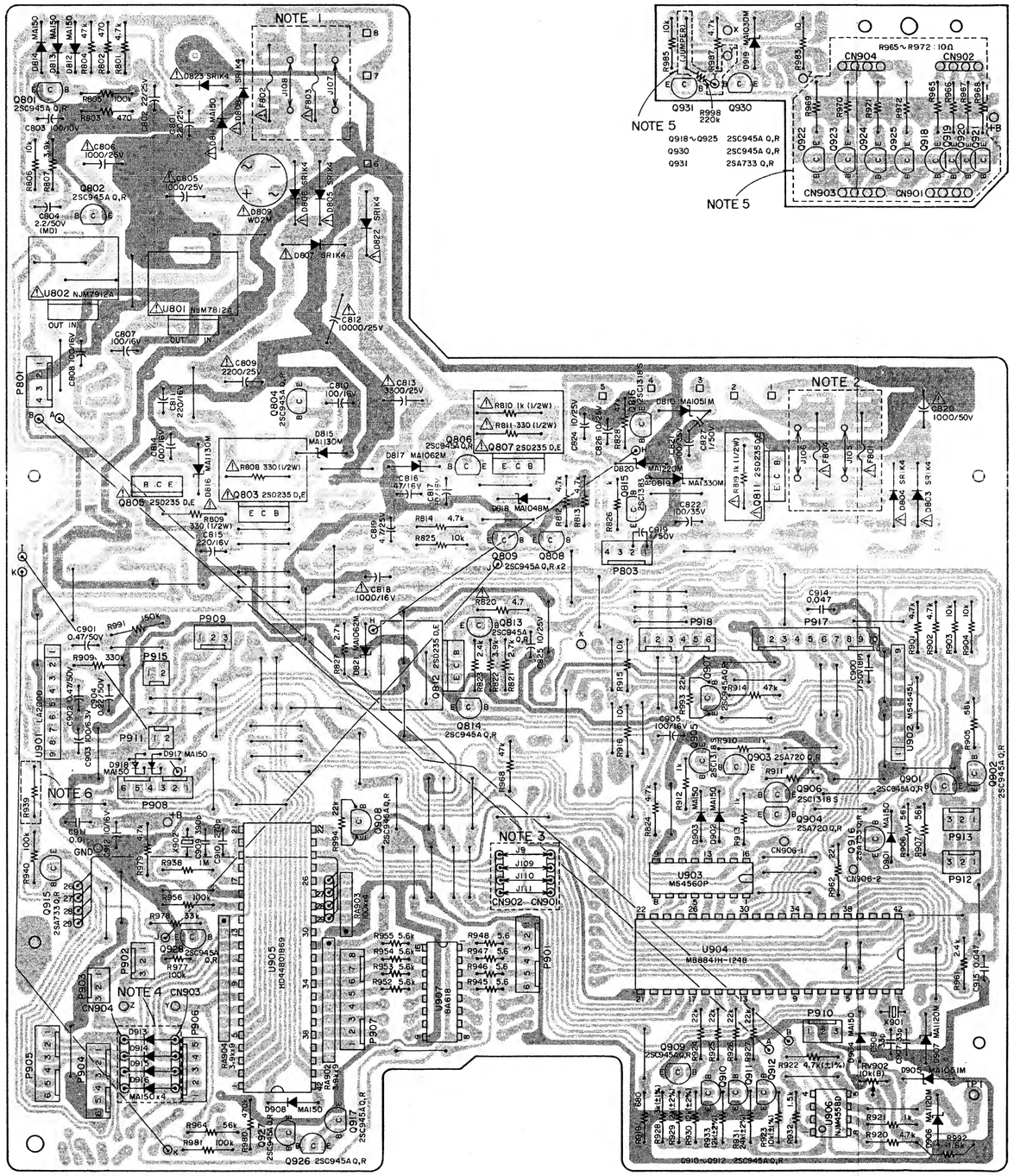

TR PCB 3 ASSY (V-800X)

		EUROPE, U.K.	OTHER
NOTE 1	F802	1.6AT	J108 (Shorting)
	F803	1.6AT	J107 (Shorting)
NOTE 2	F804	0.5AT	J106 (Shorting)
	F801	0.5AT	J105 (Shorting)

	Serial No.	10001 ~ 20000 20011 ~ 20710	20001 ~ 20010 20711 ~
NOTE 3	J9 J109 ~ J111	Open	Shorting
NOTE 4	D913 ~ D916	Not mounted	Mounted
NOTE 5	CN901 ~ CN904	Connected	Not connected
	Q918 ~ Q925 R965 ~ R972	Mounted	Not Mounted
	(Connection)	Y	Y'
	R998	Not mounted	Mounted
	(JUMPER)	Shorting	Open
NOTE 6	R939	5.6kΩ	47kΩ

NOTES

1. PC boards are shown viewed from foil side.
2. The colors on the PC board illustrations have the following significance:
   - : +B power supply circuit
   - : −B power supply circuit
   - : GND
   - : other
3. Resistor values are in ohms (k=kilo-ohms M=megohms).
4. All capacitor values are in microfarads (p=picofarads).
5. ⚠ Parts marked with this sign are safety critical components. They must always be replaced with identical components. Refer to the appropriate parts list to ensure exact replacement.

注

1. 基板図はパターン面が示されています.
2. プリント・パターンは次のように色別されています.
   - ：+B電源回路
   - ：−B電源回路
   - ：GND
   - ：その他の回路
3. 抵抗の単位はΩ(k＝kΩ, M＝MΩ)です.
4. コンデンサの単位はμF(p＝pF)です.
5. ⚠マークのある部品は安全重要部品です. 交換するときは必ずティアック指定の部品を使用してください.

POWER/CONTROL PCB ASSY (V-700)

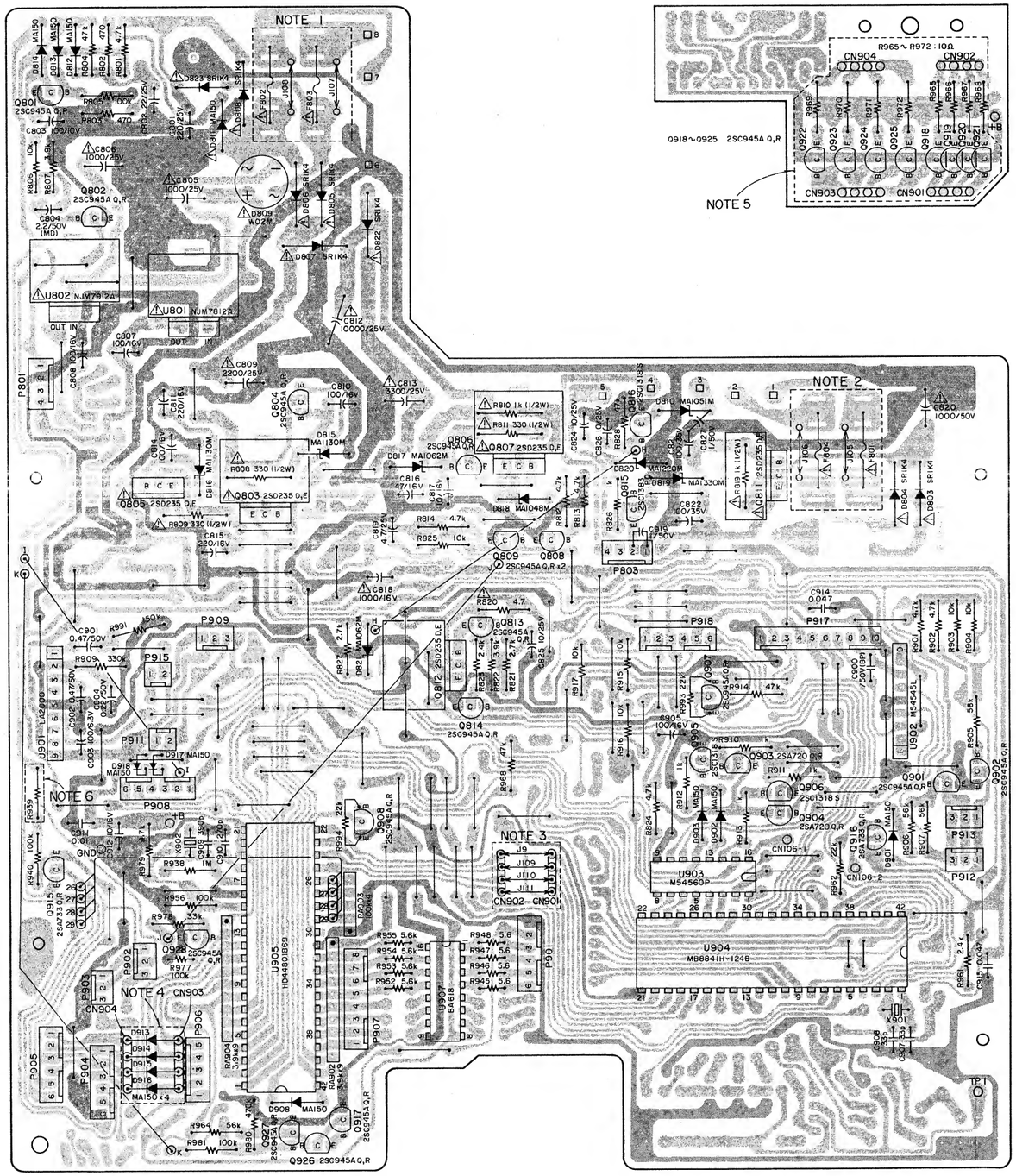

TR PCB 3 ASSY (V-700)

		EUROPE, U.K.	OTHER
NOTE 1	F802	1.6AT	J108 (Shorting)
	F803	1.6AT	J107 (Shorting)
NOTE 2	F804	0.5AT	J106 (Shorting)
	F801	0.5AT	J105 (Shorting)

	Serial No.	10001 ~ 20000	20001 ~
NOTE 3	J9 J109 ~ J111	Open	Shorting
NOTE 4	D913 ~ D916	Not mounted	Mounted
NOTE 5	CN901 ~ CN904	Connected	Not connected
	Q918 ~ Q925 R965 ~ R972	Mounted	Not Mounted
NOTE 6	R939	5.6kΩ	47kΩ

MIC AMPL PCB ASSY

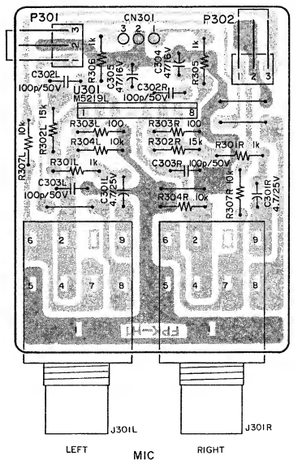

NR SW PCB ASSY (V-900X, V-800X)

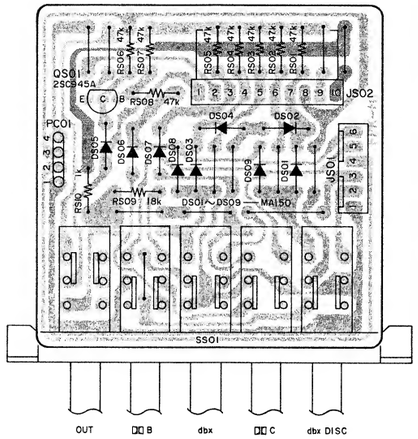

NR SW PCB ASSY (V-700)

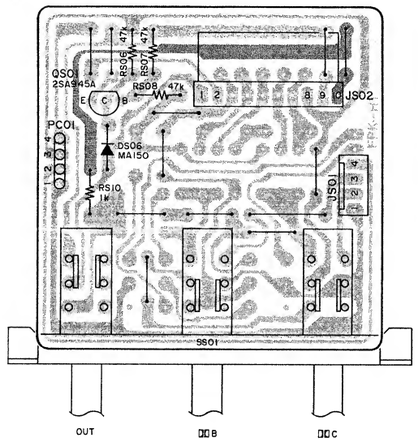

VR PCB 1, 2 ASSY (V-900X)

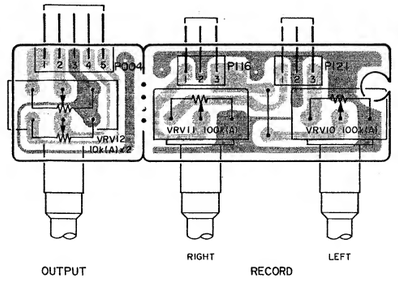

VR PCB 1, 2 ASSY (V-800X, V-700)

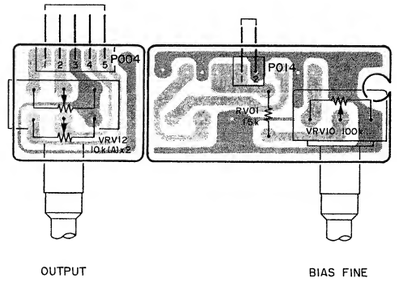

MONITOR SW PCB ASSY (V-900X)

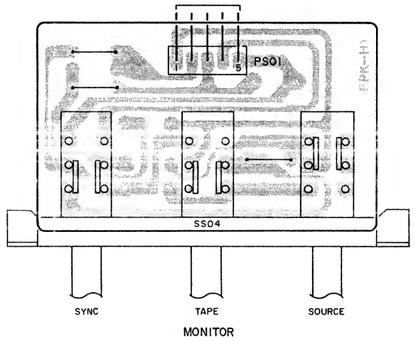

MONITOR SW PCB ASSY (V-800X, V-700)

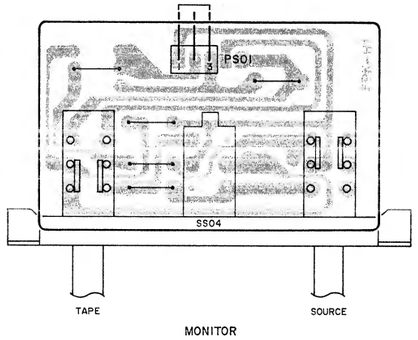

KEY SW PCB 1 ASSY

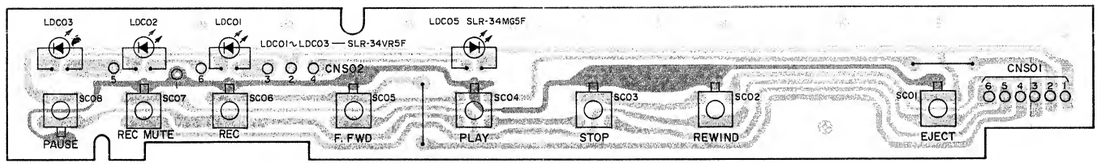

KEY SW PCB 2 ASSY (V-900X)

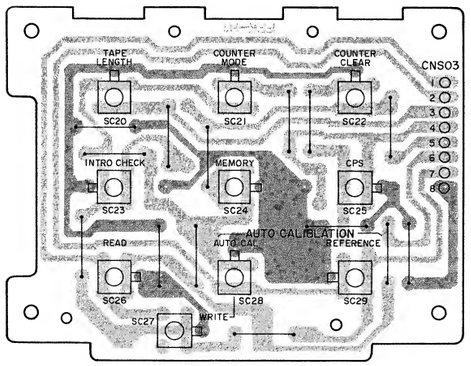

KEY SW PCB 2 ASSY (V-800X, V-700)

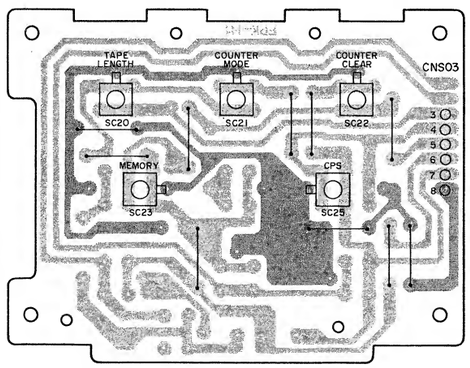

PHONES PCB ASSY

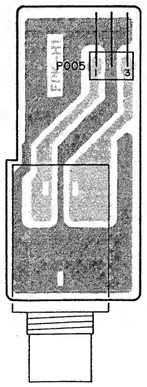

IN/OUTPUT PCB ASSY

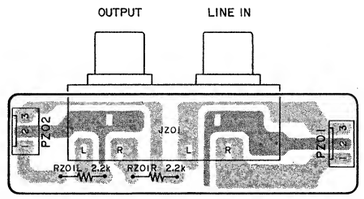

MPX SW PCB ASSY

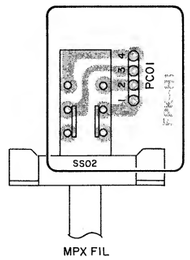

TEAC WIRING DIAGRAM V-800X

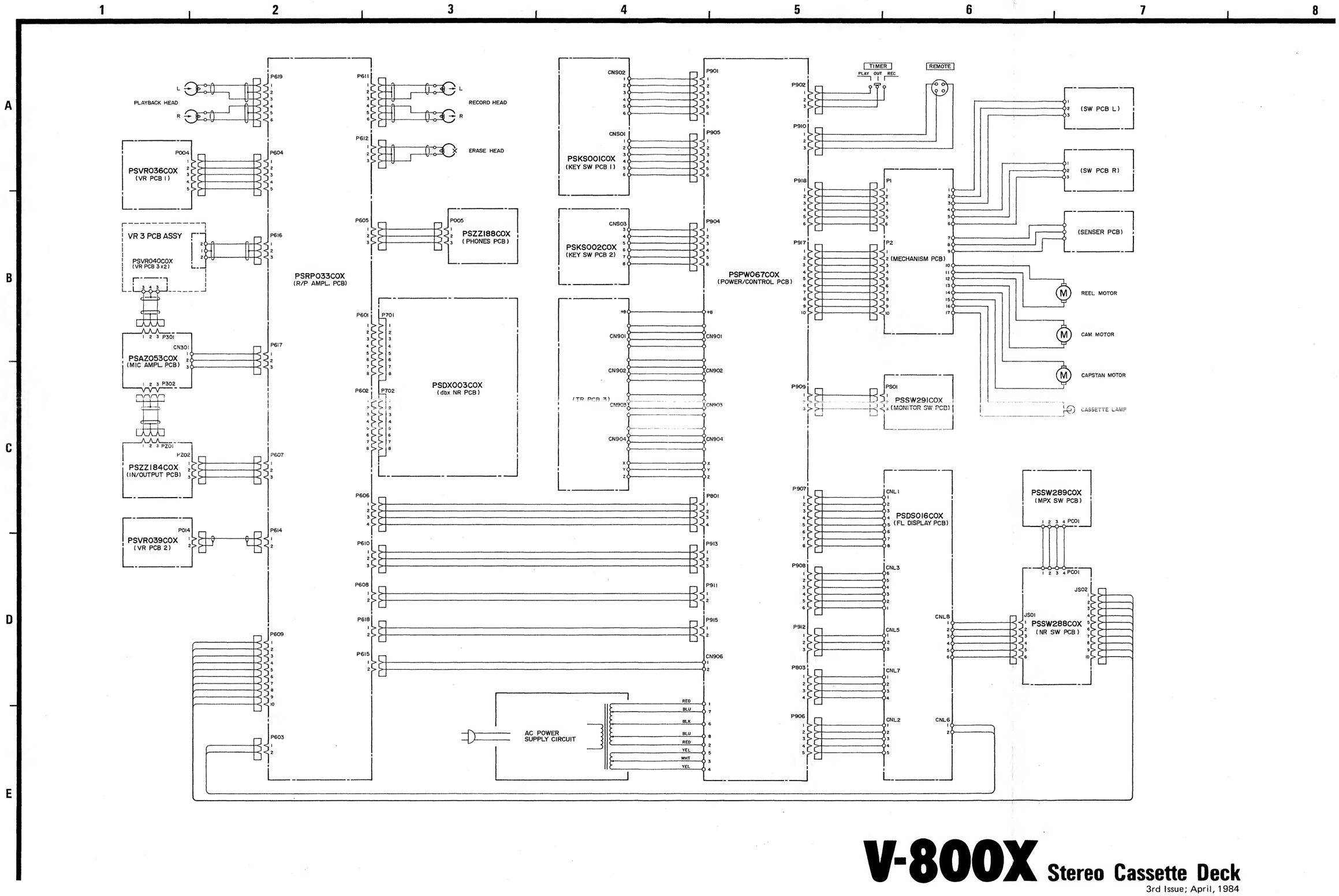

V-800X Stereo Cassette Deck

3rd Issue; April, 1984

TEAC WIRING DIAGRAM V-700

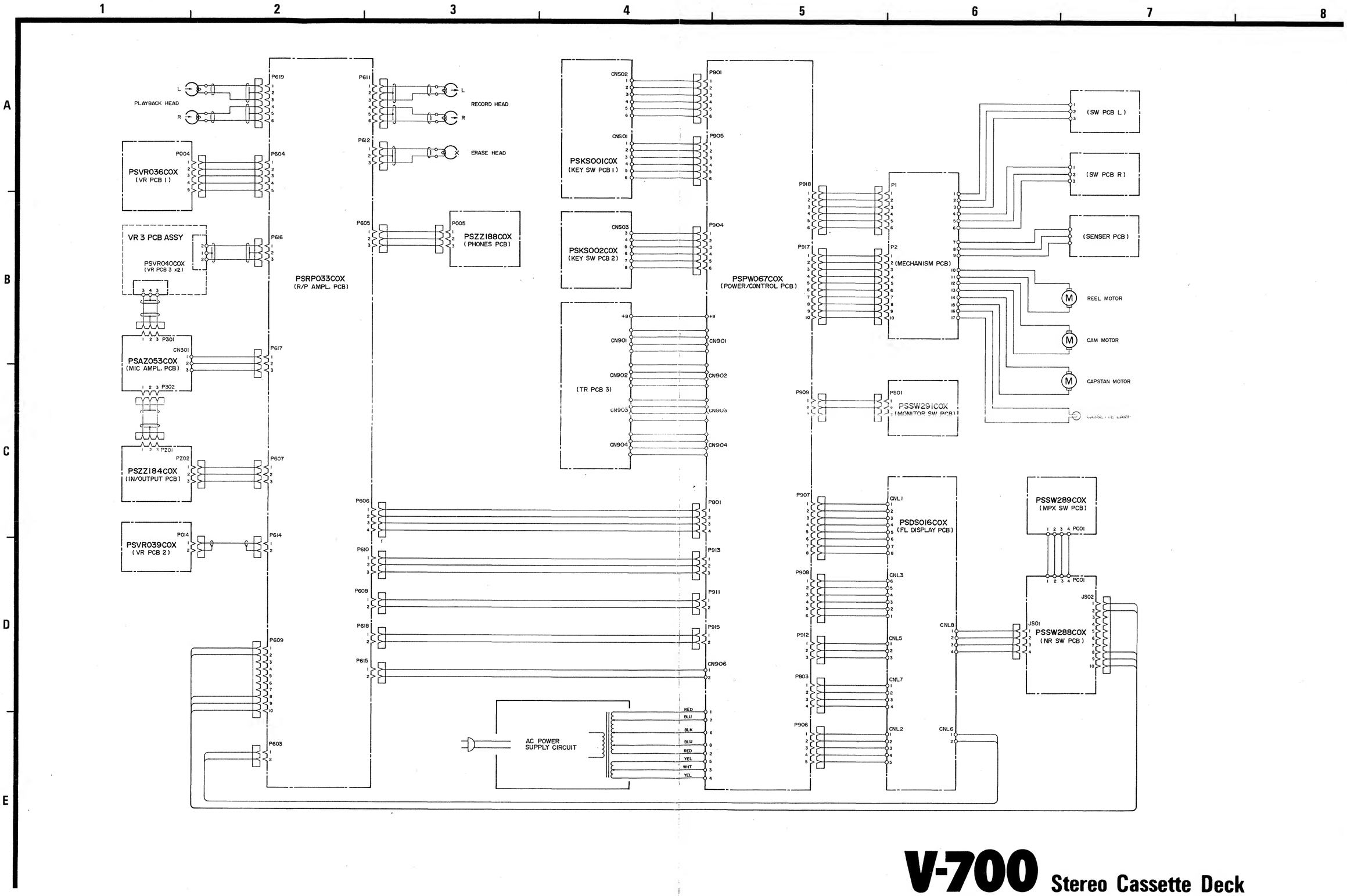

V-700 Stereo Cassette Deck

3rd Issue; April, 1984

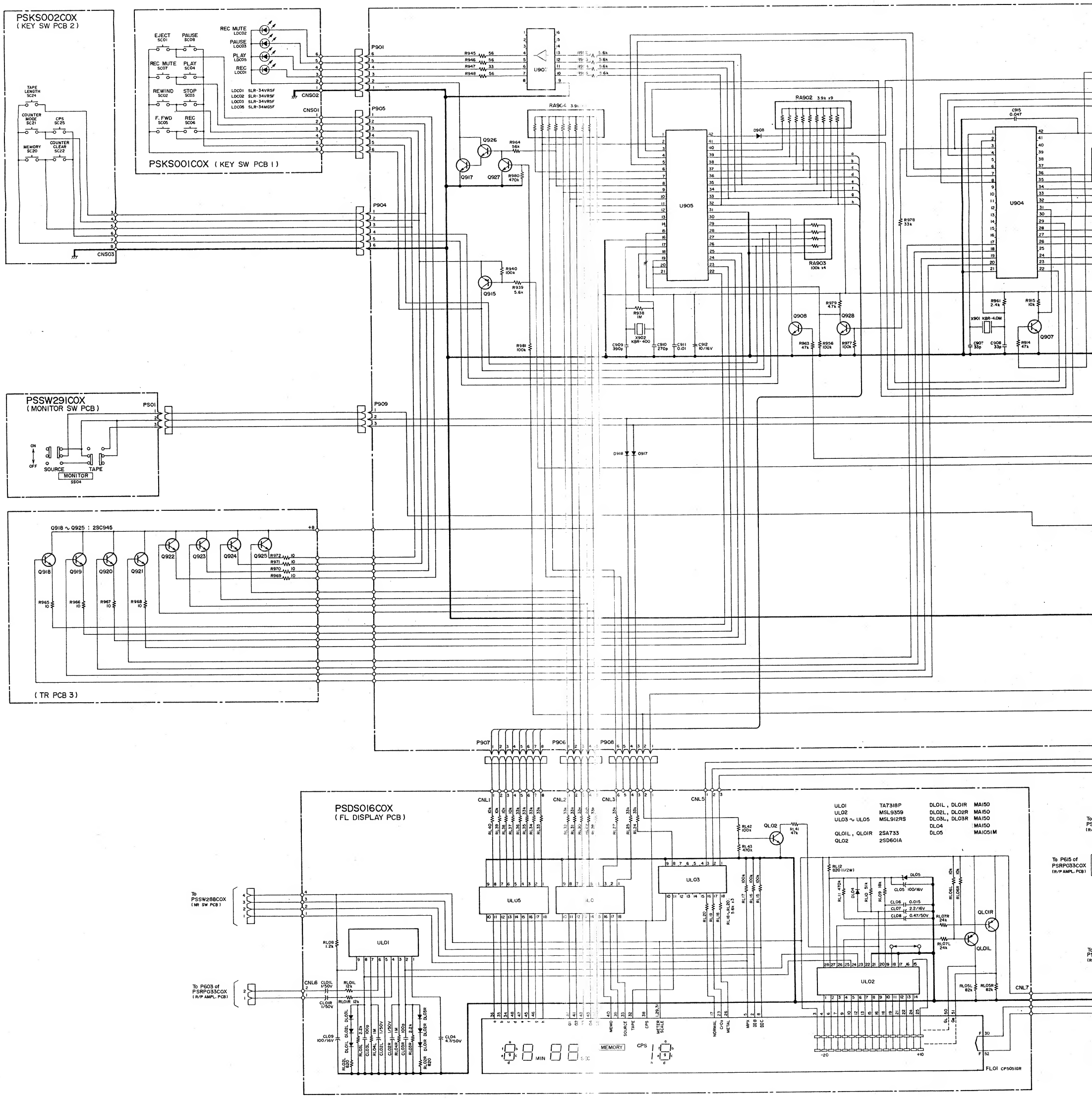
PSKS002COX
(KEY SW PCB 2)
TAPE LENGTH SC24
COUNTER MODE SC21
CPS SC25
MEMORY SC20
COUNTER CLEAR SC22
CNS03
PSKS001COX (KEY SW PCB 1)
EJECT SC01
PAUSE SC08
REC MUTE SC07
PLAY SC04
REWIND SC02
STOP SC03
F. FWD SC05
REC SC06
REC MUTE LDC02
PAUSE LDC03
PLAY LDC05
REC LDC01
LDC01 SLR-34VR5F
LDC02 SLR-34VR5F
LDC03 SLR-34VR5F
LDC05 SLR-34MG5F
CNS02
CNS01
P901
P905
P904
U907
RA904 3.9k
RA902 3.9k x9
RA903 100k x4
U905
U904
D908
C915 0.047
R978 33k
Q926
Q917
Q927
R964 56k
R980 470k
R940 100k
R939 5.6k
Q915
R938 1M
X902 KBR-400
C909 390p
C910 270p
C911 0.01
C912 10/16V
R981 100k
Q908
Q928
R979 4.7k
R963 47k
R956 100k
R977 100k
R961 2.4k
R915 10k
X901 KBR-4.0M
C907 33p
C908 33p
R914 47k
Q907
PSSW291COX
(MONITOR SW PCB)
PS01
P909
ON
OFF
SOURCE
TAPE
MONITOR
SS04
D918
D917
Q918 ~ Q925 : 2SC945
+B
Q918
Q919
Q920
Q921
Q922
Q923
Q924
Q925
R972 10
R971 10
R970 10
R969 10
R965 10
R966 10
R967 10
R968 10
(TR PCB 3)
P907
P906
P908
PSDS016COX
(FL DISPLAY PCB)
CNL1
CNL2
CNL3
CNL5
CNL6
CNL7
To PSSW288COX (NR SW PCB)
To P603 of PSRP033COX (R/P AMPL. PCB)
To P615 of PSRP033COX (R/P AMPL. PCB)
UL01
UL02
UL03 ~ UL05
QL01L , QL01R
QL02
TA7318P
MSL9359
MSL912RS
2SA733
2SD601A
DL01L , DL01R
DL02L , DL02R
DL03L , DL03R
DL04
DL05
MA150
MA150
MA150
MA150
MA1051M
QL02
QL01R
QL01L
RL08 1.2k
CL01L 1/50V
RL01L 12k
CL01R 1/50V
RL01R 12k
CL09 100/16V
CL04 4.7/50V
MIN
SEC
MEMORY
CPS
MEMO
SOURCE
TAPE
CPS
METER SCALE
NORMAL
CrO2
METAL
MPX
DEB
DOC
-20
+10
FL01 CPS051GR

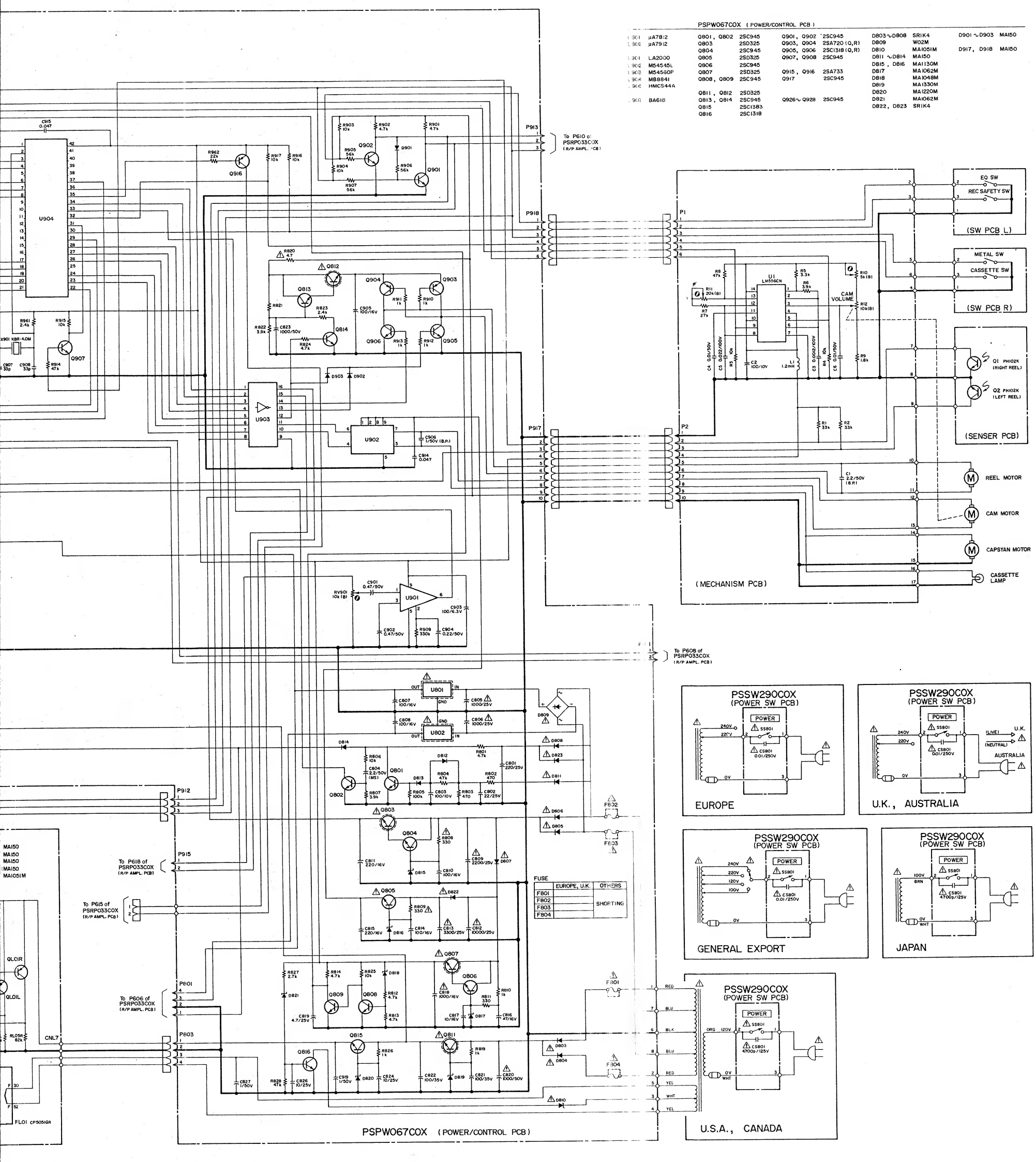

IC801	μA7812	Q801, Q802	2SC945	Q901, Q902	2SC945	D803∿D808	SR1K4	D901∿D903	MA150
IC802	μA7912	Q803	2SD325	Q903, Q904	2SA720 (Q,R)	D809	W02M		
		Q804	2SC945	Q905, Q906	2SC1318 (Q,R)	D810	MA1051M	D917, D918	MA150
IC901	LA2000	Q805	2SD325	Q907, Q908	2SC945	D811∿D814	MA150		
IC902	M54545L	Q806	2SC945			D815, D816	MA1130M		
IC903	M54560P	Q807	2SD325	Q915, Q916	2SA733	D817	MA1062M		
IC904	MB8841	Q808, Q809	2SC945	Q917	2SC945	D818	MA1048M		
IC905	HMCS44A					D819	MA1330M		
		Q811, Q812	2SD325			D820	MA1220M		
IC907	BA618	Q813, Q814	2SC945	Q926∿Q928	2SC945	D821	MA1062M		
		Q815	2SC1383			D822, D823	SR1K4		
		Q816	2SC1318						

TEAC®
V-700
November, 1983

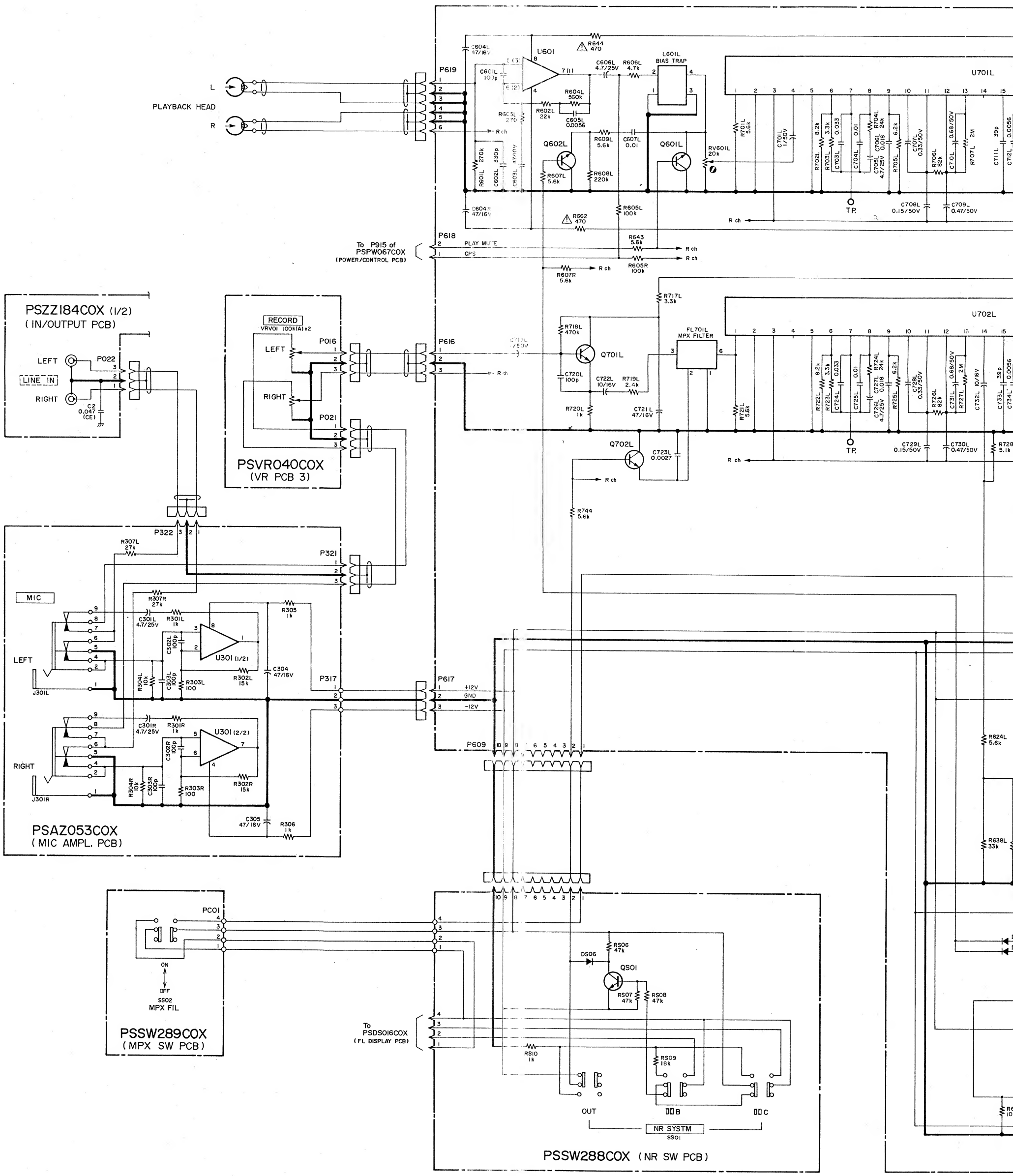

PSAZ053COX
(MIC AMPL. PCB)

U301	M5219L

PSSW288COX
(NR SW PCB)

QS01	2SC945(Q,R)
DS06	MA150

PSRP033COX
(POWER/CONTROL PCB)

U601	M5220	Q601L , Q601R	2SC2878	Q617L , Q617R	2SC2878	Q701L , Q701R	2SC945(Q,R)
U602	M5218	Q602L , Q602R	2SC945(Q,R)	Q618L , Q618R	2SC945(Q,R)	Q702L , Q702R	2SC945(Q,R)
U603	RC4558P			Q619L , Q619R	2SC945(Q,R)		
		Q609L , Q609R	2SK136	Q620L , Q620R	2SC945(Q,R)		
U702L , U702R	HA12058	Q610L , Q610R	2SC945(Q,R)	Q621L , Q621R	2SC945(Q,R)	D607L , D607R	MA150
U702L , U702R	HA12058	Q611L , Q611R	2SK136	Q622L , Q622R	2SC945(Q,R)	D608L , D608R	MA150
		Q612L , Q612R	2SC945(Q,R)	Q623 , Q624	2SA733	D609 ∿D611	MA150
		Q613L , Q613R	2SC2878	Q625 , Q626	2SC945(Q,R)	D612 , D613	MA1120M
				Q627	2SC1383		
				Q628	2SC945(Q,R)		

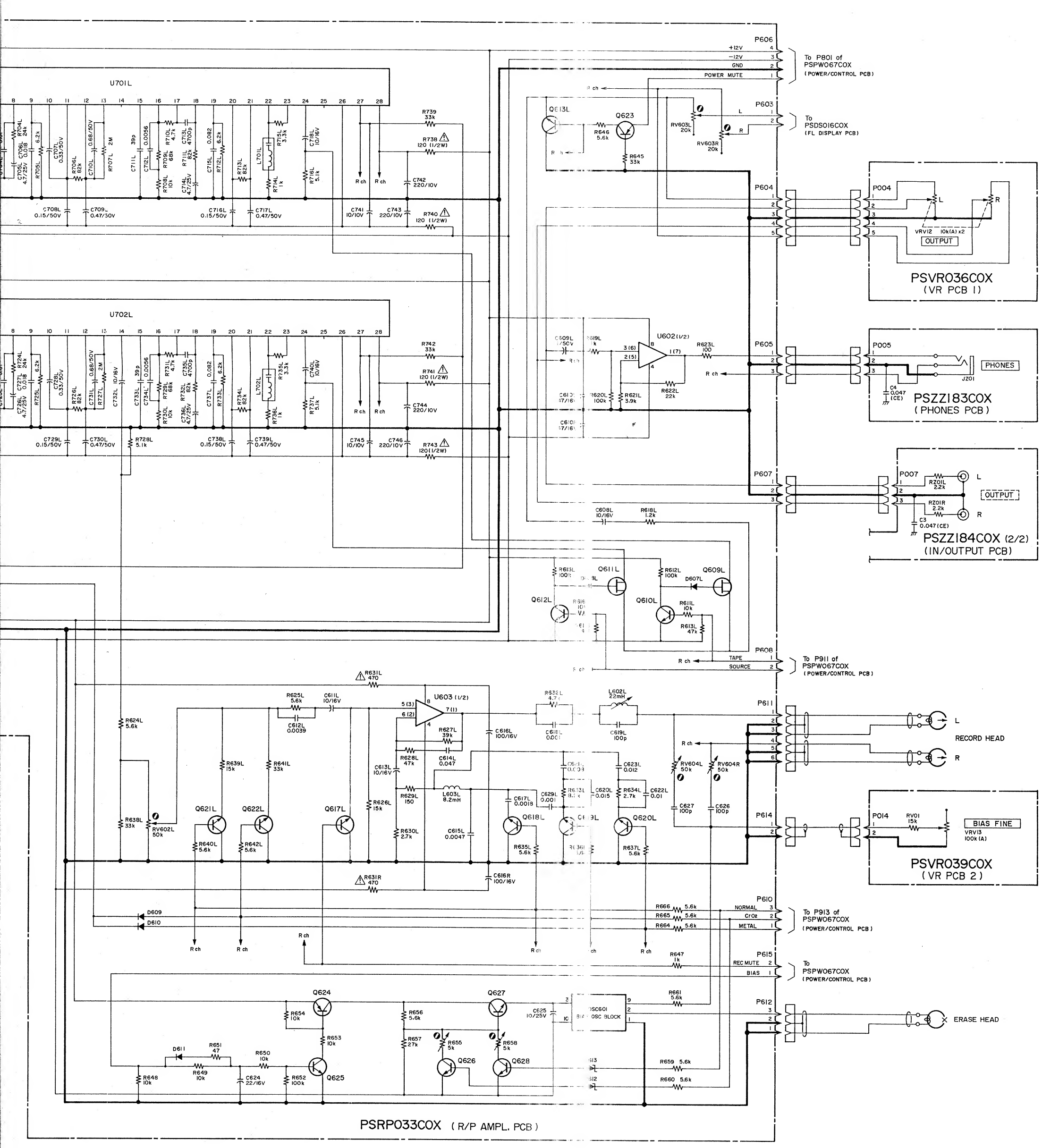

L, Q701R	2SC945(Q,R)
L, Q702R	2SC945(Q,R)
L, D607R	MA150
L, D608R	MA150
∿D611	MA150
, D613	MA1120M

1

TEAC

V-700

November, 1983

TEAC SCHEMATIC DIAGRAM (POWER/CONTROL, FL DISPLAY) V-700

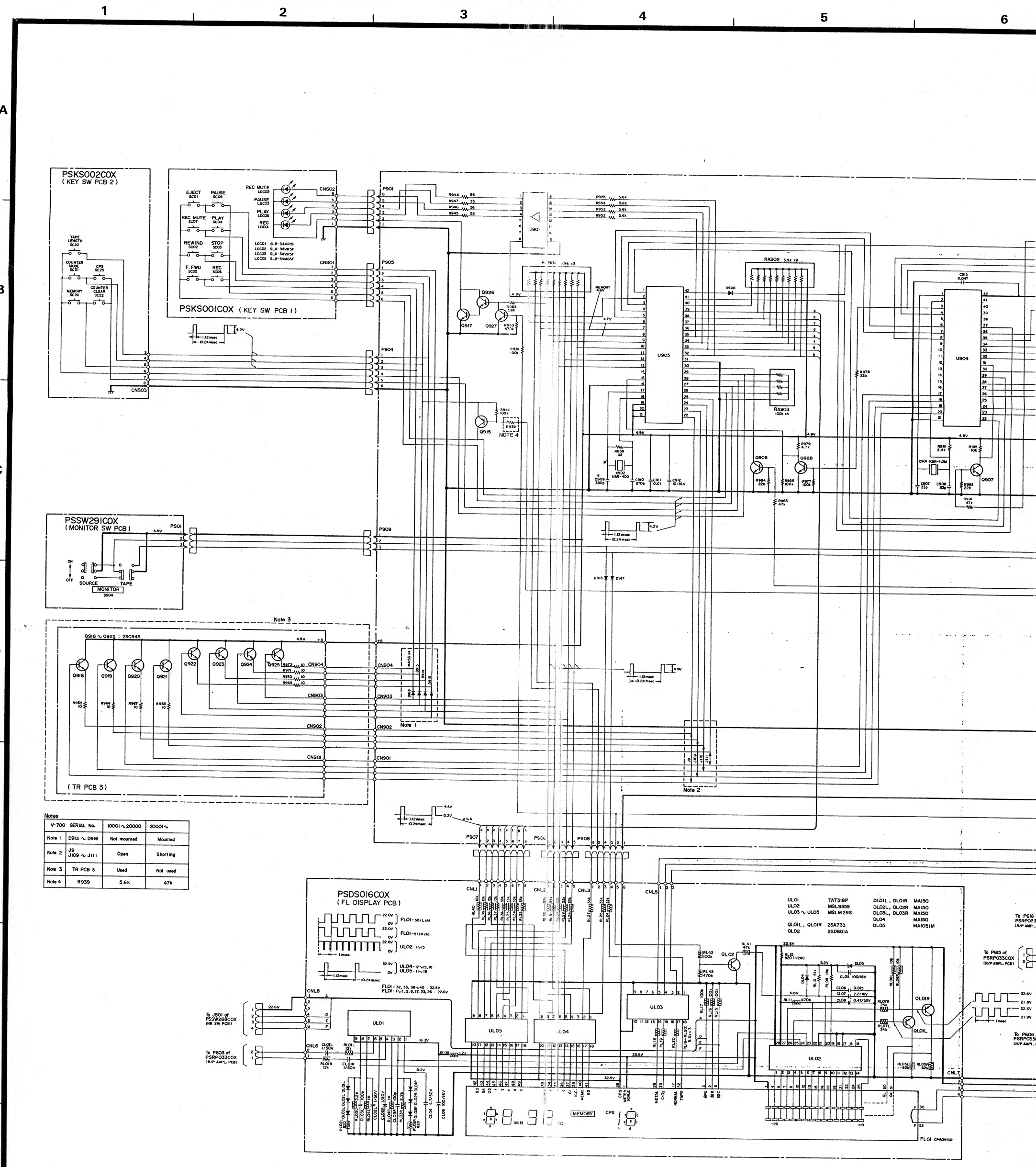

Notes			
V-700 SERIAL No.		10001 ~ 20000	20001 ~
Note 1	D913 ~ D916	Not mounted	Mounted
Note 2	J9 J109 ~ J111	Open	Shorting
Note 3	TR PCB 3	Used	Not used
Note 4	R939	5.6k	47k

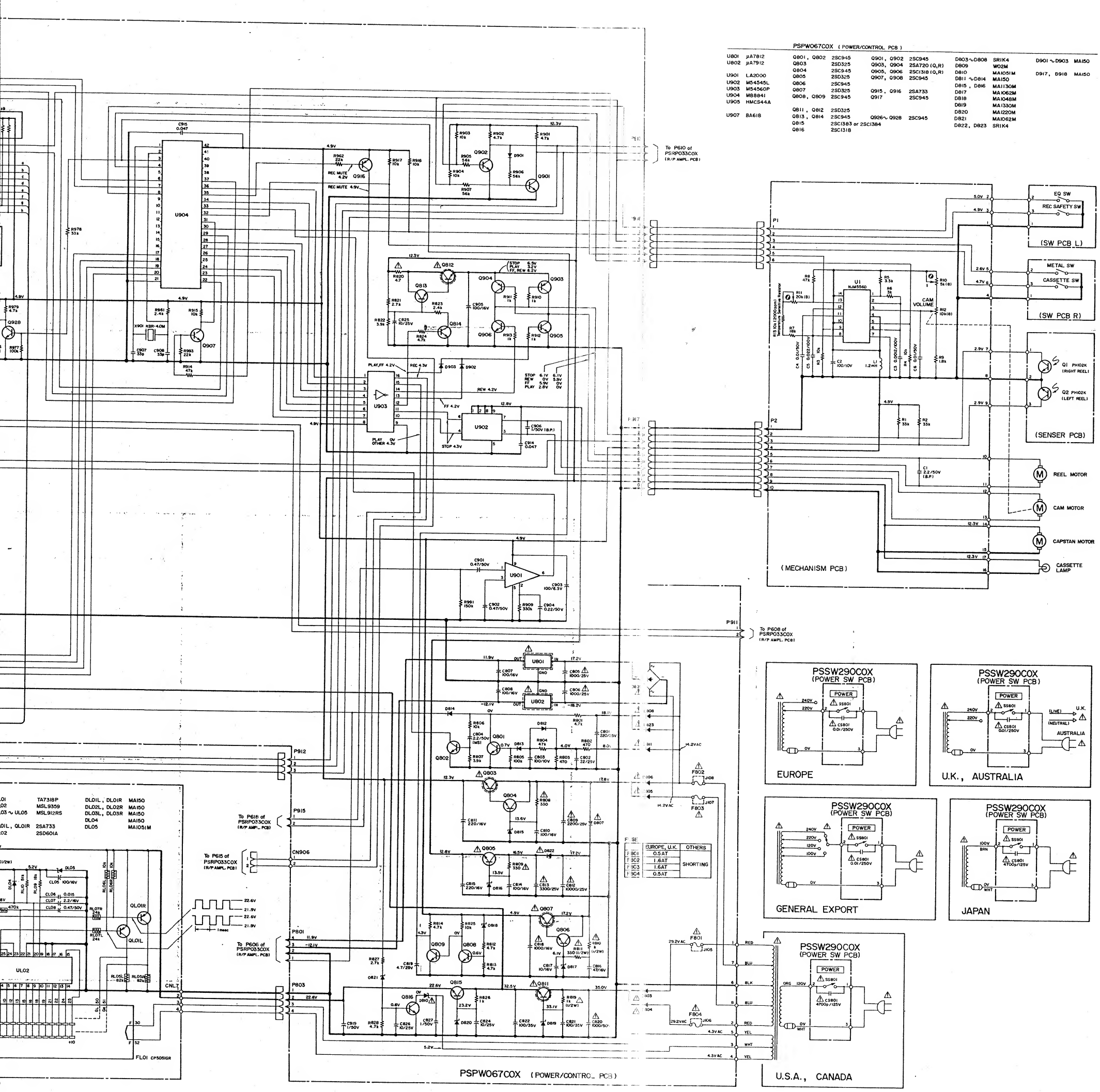

V-700 Stereo Cassette Deck

3rd Issue; April, 1984

TEAC SCHEMATIC DIAGRAM (R/P AMPL., MIC AMPL.) V-700

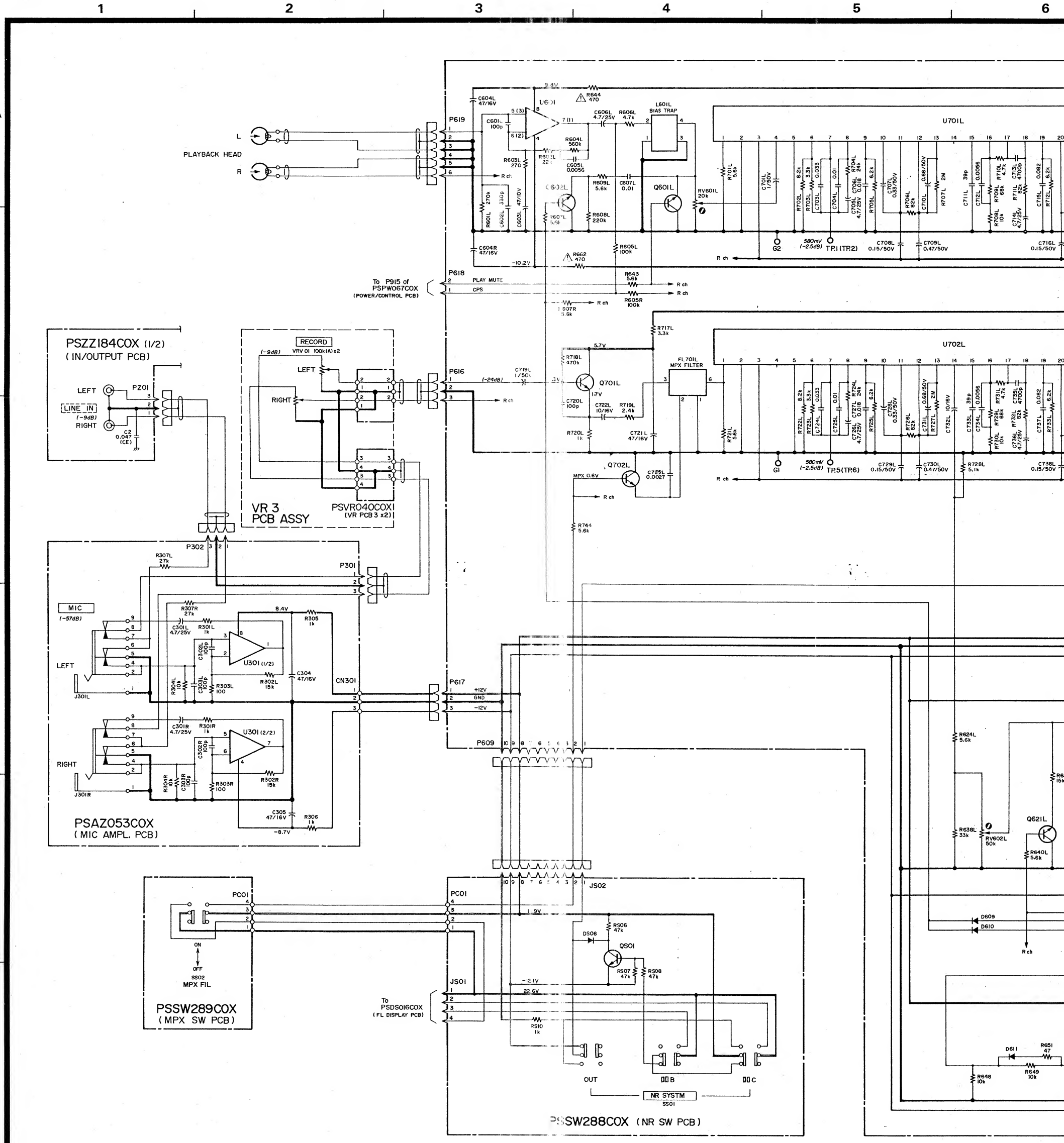

PSAZ053COX (MIC AMPL. PCB)

U301	M5219L

PSSW288COX (NR SW PCB)

QS01	2SC945(Q,R)
DS06	MA150

PSRP033COX (POWER/CONTROL PCB)

U601	M5220	Q601L , Q601R	2SC2878	Q617L , Q617R	2SC2878	Q701L , Q701R	2SC945(Q,R)
U602	M5218	Q602L , Q602R	2SC945(Q,R)	Q618L , Q618R	2SC945(Q,R)	Q702L , Q702R	2SC945(Q,R)
U603	RC4558P			Q619L , Q619R	2SC945(Q,R)		
		Q609L , Q609R	2SK136	Q620L , Q620R	2SC945(Q,R)		
U702L , U702R	HA12058	Q610L , Q610R	2SC945(Q,R)	Q621L , Q621R	2SC945(Q,R)	D607L , D607R	MA150
U702L , U702R	HA12058	Q611L , Q611R	2SK136	Q622L , Q622R	2SC945(Q,R)	D608L , D608R	MA150
		Q612L , Q612R	2SC945(Q,R)	Q623 , Q624	2SA733	D609 ∿D611	MA150
		Q613L , Q613R	2SC2878	Q625 , Q626	2SC945(Q,R)	D612 , D613	MA1120M
				Q627	2SC1383	D620	MA150
				Q628	2SC945(Q,R)		

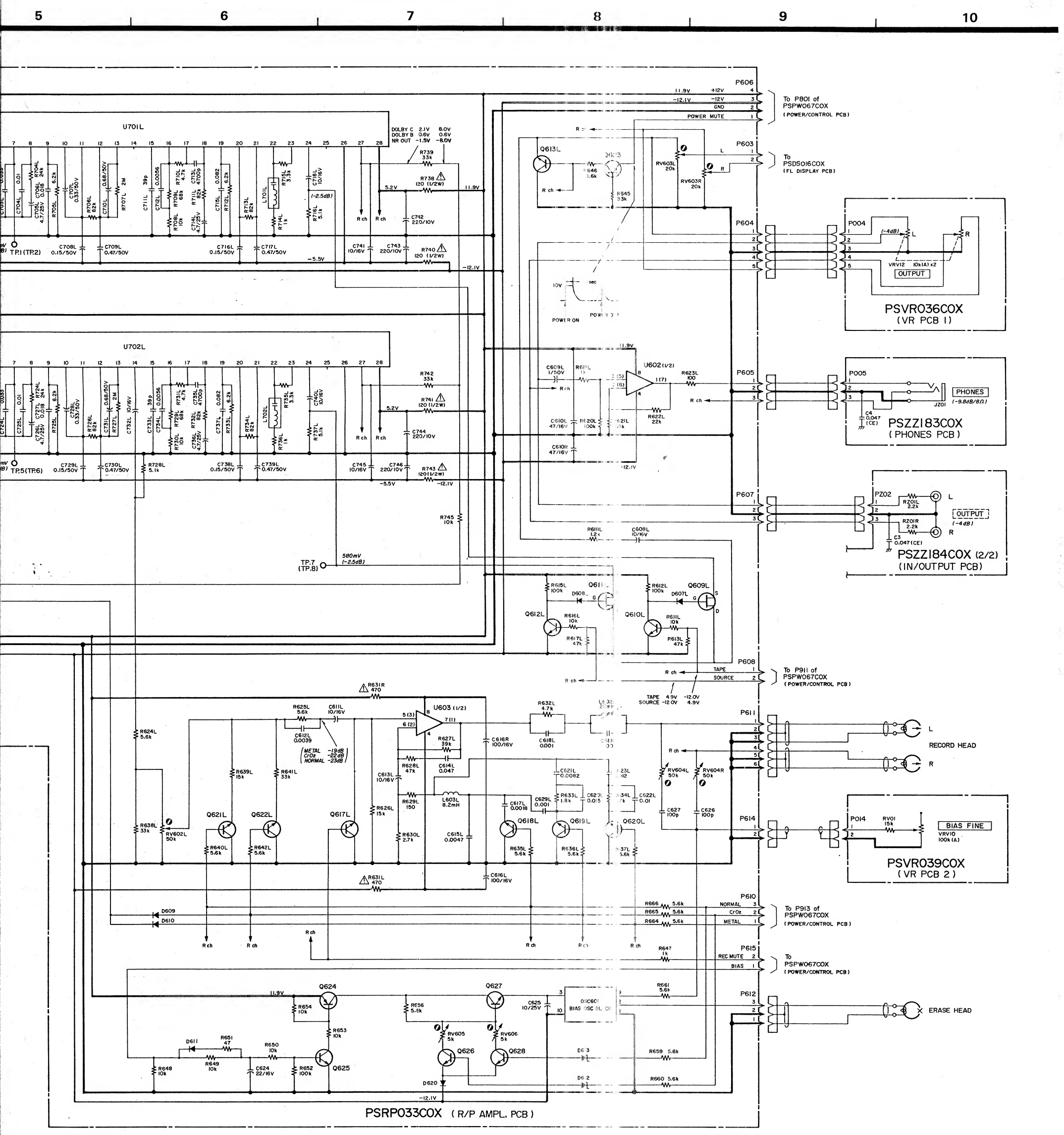

Q701L , Q701R	2SC945(Q,R)
Q702L , Q702R	2SC945(Q,R)
D607L , D607R	MA150
D608L , D608R	MA150
D609 ~D611	MA150
D612 , D613	MA1120M
D620	MA150

V-700 Stereo Cassette Deck

3rd Issue; April, 1984

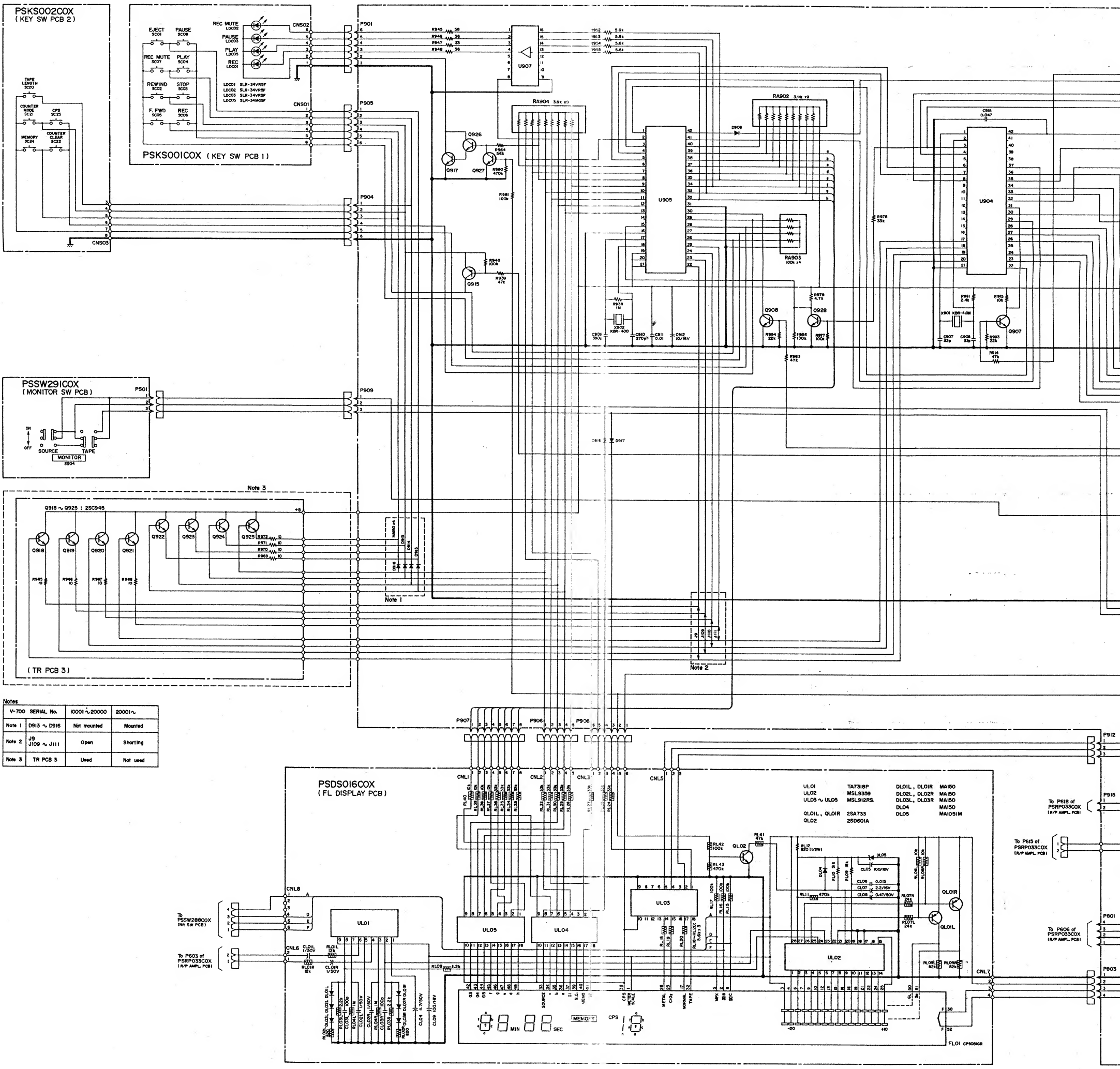

Notes

V-700 SERIAL No.		10001 ~ 20000	20001 ~
Note 1	D913 ~ D916	Not mounted	Mounted
Note 2	J9 J109 ~ J111	Open	Shorting
Note 3	TR PCB 3	Used	Not used

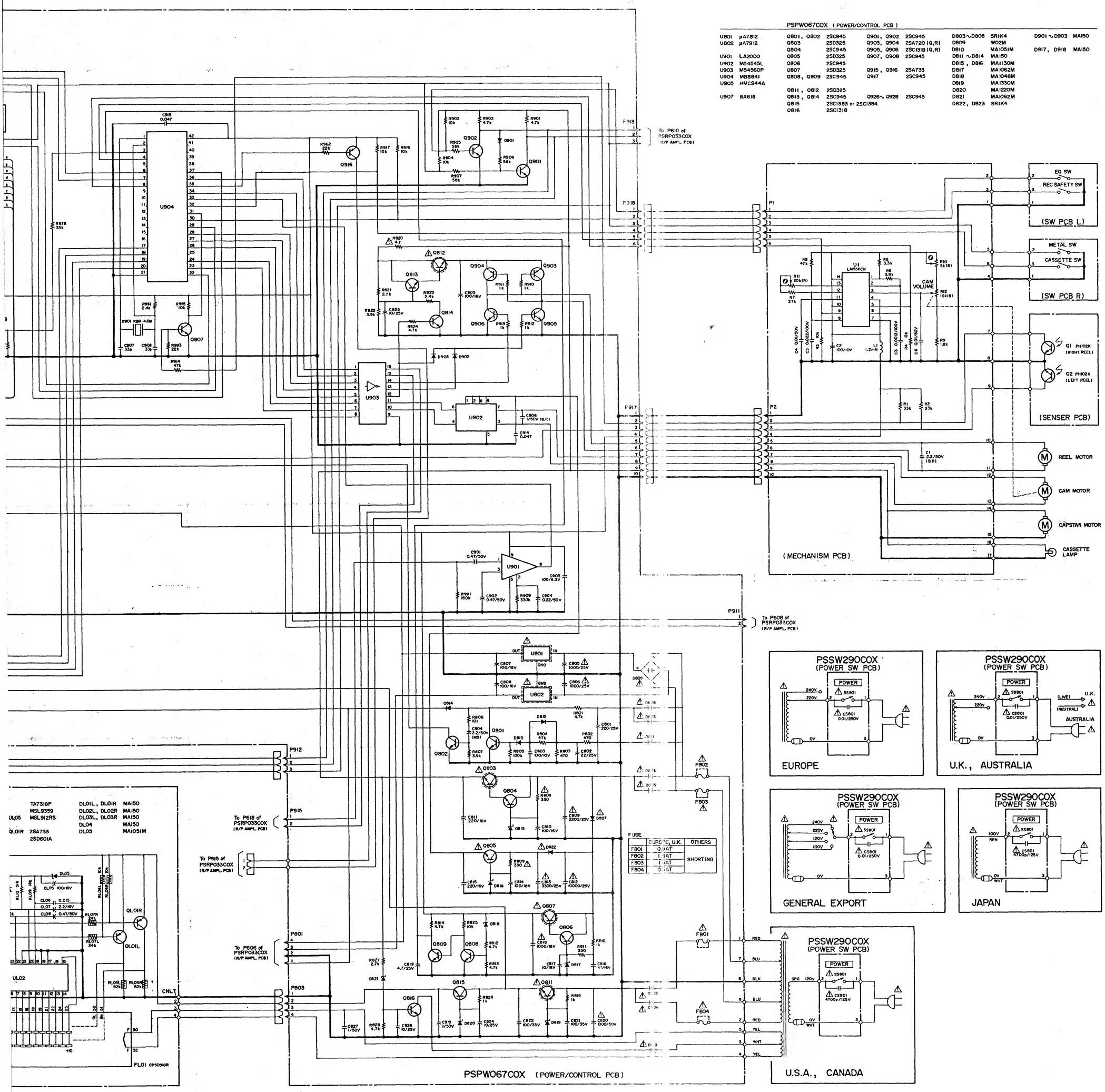

PSPW067COX (POWER/CONTROL PCB)

U801	μA7812	Q801, Q802	2SC945	Q901, Q902	2SC945	D803∿D808	SR1K4	D901∿D903	MA150
U802	μA7912	Q803	2SD325	Q903, Q904	2SA720 (Q,R)	D809	W02M		
		Q804	2SC945	Q905, Q906	2SC1318 (Q,R)	D810	MA1051M	D917, D918	MA150
U901	LA2000	Q805	2SD325	Q907, Q908	2SC945	D811 ∿D814	MA150		
U902	M54545L	Q806	2SC945			D815, D816	MA1130M		
U903	M54560P	Q807	2SD325	Q915, Q916	2SA733	D817	MA1062M		
U904	M88841	Q808, Q809	2SC945	Q917	2SC945	D818	MA1048M		
U905	HMCS44A					D819	MA1330M		
		Q811, Q812	2SD325			D820	MA1220M		
U907	BA618	Q813, Q814	2SC945	Q926∿Q928	2SC945	D821	MA1062M		
		Q815	2SC1383 or 2SC1384			D822, D823	SR1K4		
		Q816	2SC1318						

	TA7318P	DL01L, DL01R	MA150
	MSL9359	DL02L, DL02R	MA150
DL05	MSL9125	DL03L, DL03R	MA150
		DL04	MA150
DL01R	2SA733	DL05	MA1051M
	2SD601A		

FUSE	EUROPE, U.K.	OTHERS
F801	0.3AT	SHORTING
F802	1.3AT	
F803	1.3AT	
F804	0.3AT	

TEAC V-700

2nd Issue; February, 1984

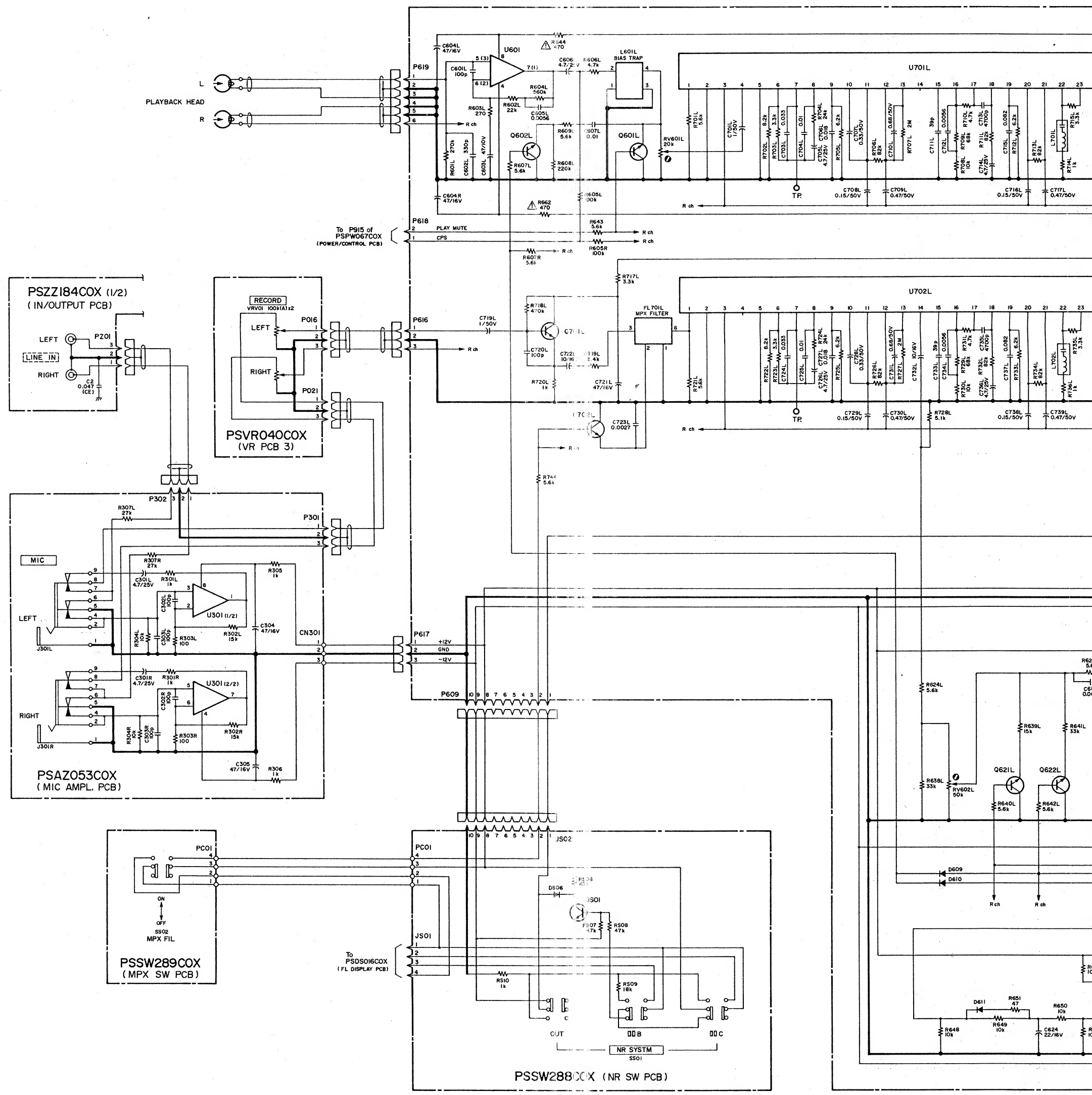

PSAZ053COX
(MIC AMPL. PCB)

U301	M5219L

PSSW288COX
(NR SW PCB)

QS01	2SC945(Q,R)
DS06	MA150

PSRP033COX
(POWER/CONTROL PCB)

U601	M5220	Q601L , Q601R	2SC2878	Q617L , Q617R	2SC2878	Q701L , Q701R	2SC945(Q,R)
U602	M5218	Q602L , Q602R	2SC945(Q,R)	Q618L , Q618R	2SC945(Q,R)	Q702L , Q702R	2SC945(Q,R)
U603	RC4558P			Q619L , Q619R	2SC945(Q,R)		
		Q609L , Q609R	2SK136	Q620L , Q620R	2SC945(Q,R)		
U702L , U702R	HA12058	Q610L , Q610R	2SC945(Q,R)	Q621L , Q621R	2SC945(Q,R)	D607L , D607R	MA150
U702L , U702R	HA12058	Q611L , Q611R	2SK136	Q622L , Q622R	2SC945(Q,R)	D608L , D608R	MA150
		Q612L , Q612R	2SC945(Q,R)	Q623 , Q624	2SA733	D609 ∿D611	MA150
		Q613L , Q613R	2SC2878	Q625 , Q626	2SC945(Q,R)	D612 , D613	MA1120M
				Q627	2SC1383	D620	MA150
				Q628	2SC945(Q,R)		

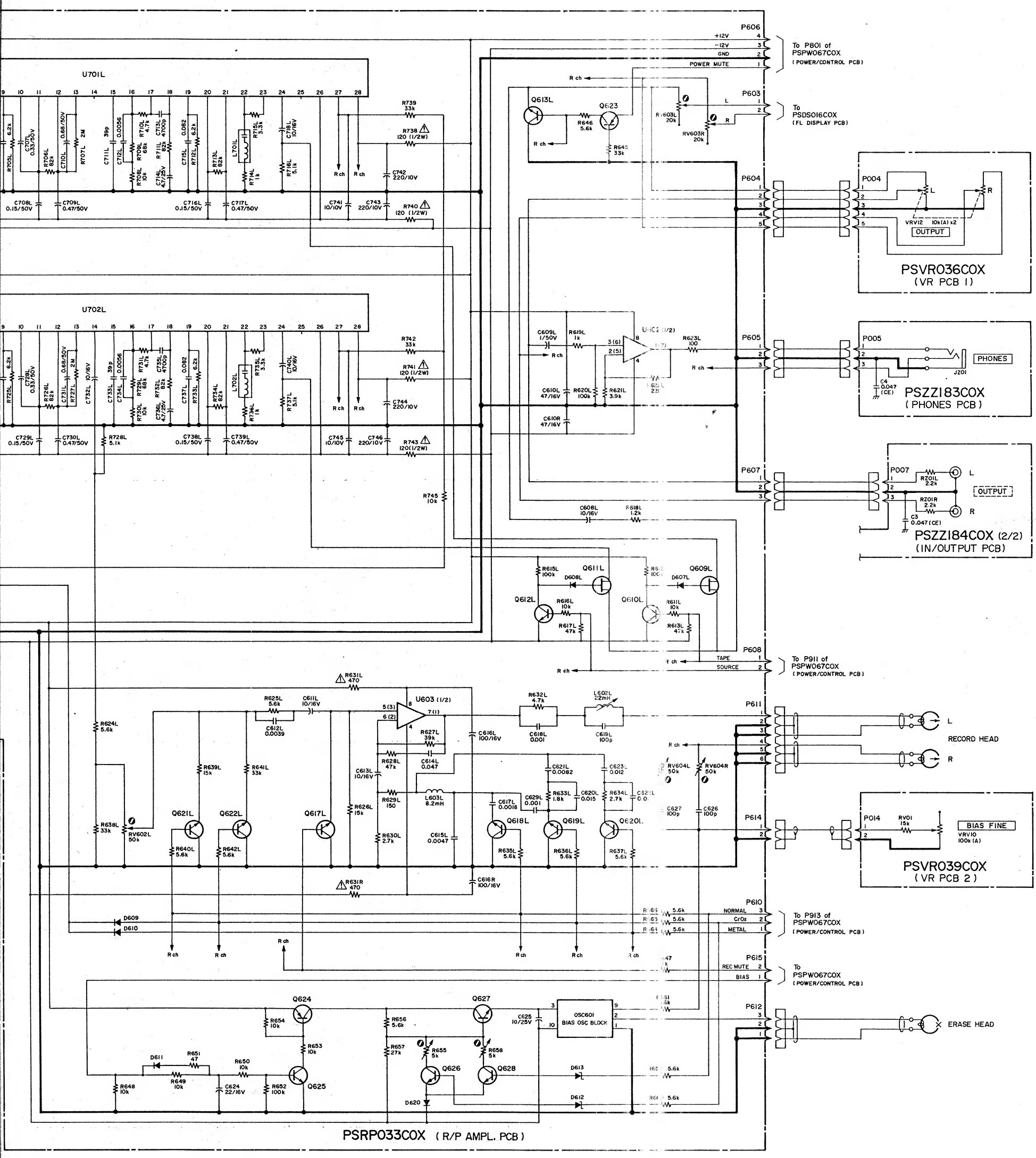

01R	2SC945(Q,R)
02R	2SC945(Q,R)
07R	MA150
08R	MA150
1	MA150
3	MA1120M
	MA150

TEAC V-700

2nd Issue; February, 1984

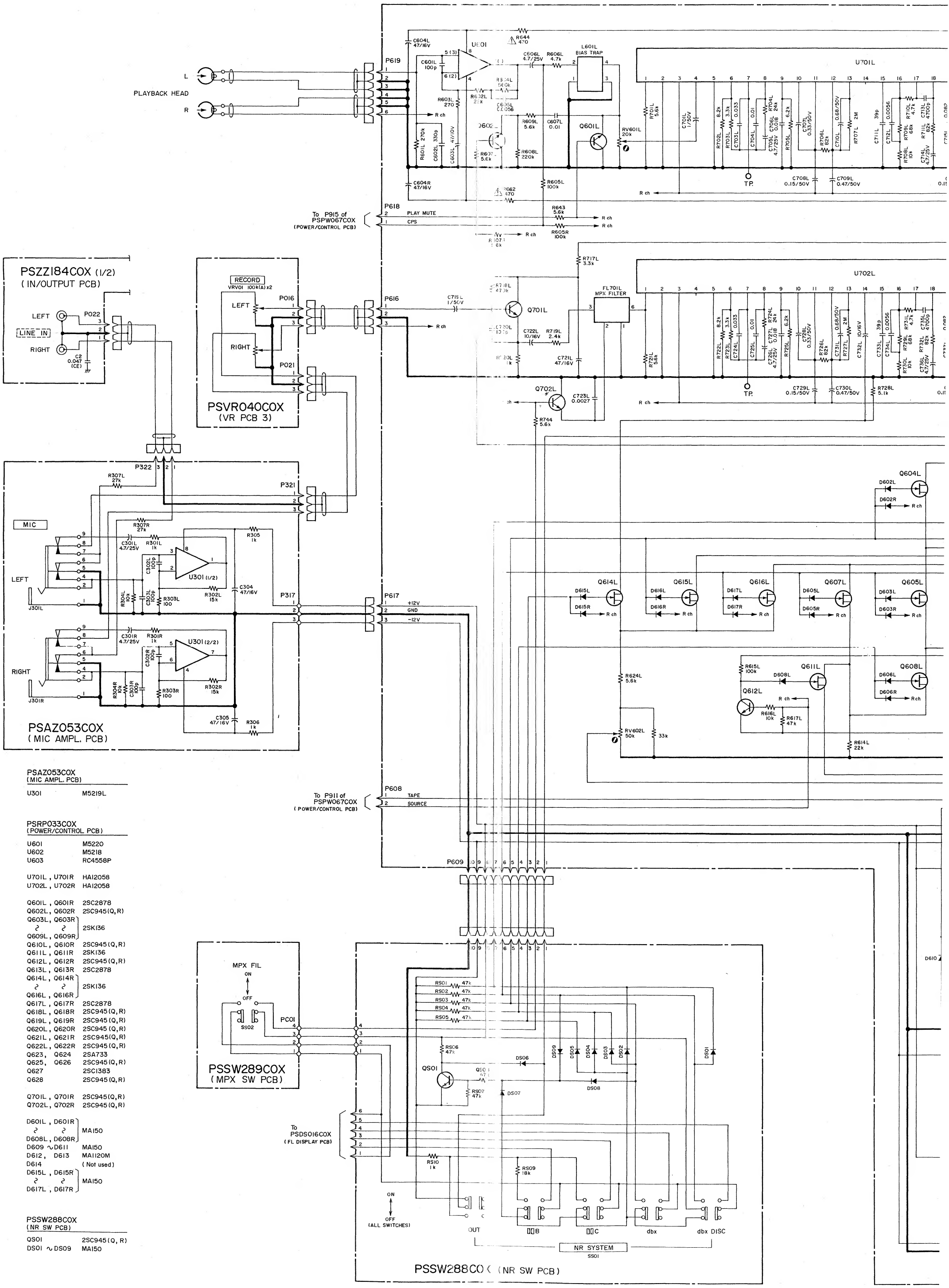

PSAZ053COX
(MIC AMPL. PCB)

U301	M5219L

PSRP033COX
(POWER/CONTROL PCB)

U601	M5220
U602	M5218
U603	RC4558P
U701L , U701R	HA12058
U702L , U702R	HA12058
Q601L , Q601R	2SC2878
Q602L , Q602R	2SC945(Q,R)
Q603L , Q603R ~ Q609L , Q609R	2SK136
Q610L , Q610R	2SC945(Q,R)
Q611L , Q611R	2SK136
Q612L , Q612R	2SC945(Q,R)
Q613L , Q613R	2SC2878
Q614L , Q614R ~ Q616L , Q616R	2SK136
Q617L , Q617R	2SC2878
Q618L , Q618R	2SC945(Q,R)
Q619L , Q619R	2SC945(Q,R)
Q620L , Q620R	2SC945(Q,R)
Q621L , Q621R	2SC945(Q,R)
Q622L , Q622R	2SC945(Q,R)
Q623, Q624	2SA733
Q625, Q626	2SC945(Q,R)
Q627	2SC1383
Q628	2SC945(Q,R)
Q701L , Q701R	2SC945(Q,R)
Q702L , Q702R	2SC945(Q,R)
D601L , D601R ~ D608L , D608R	MA150
D609 ~ D611	MA150
D612, D613	MA1120M
D614	(Not used)
D615L , D615R ~ D617L , D617R	MA150

PSSW288COX
(NR SW PCB)

QS01	2SC945(Q, R)
DS01 ~ DS09	MA150

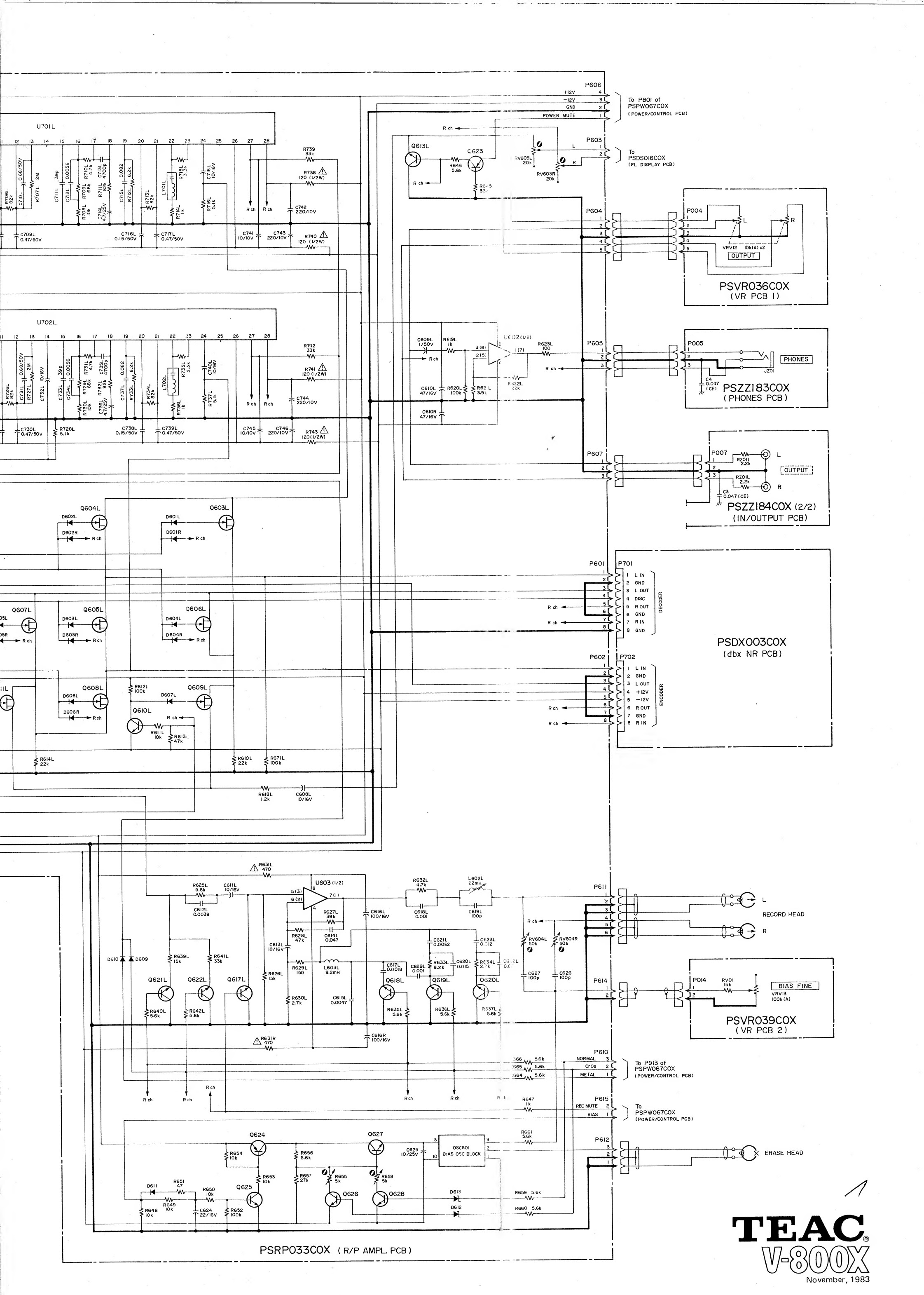

TEAC

V-800X

November, 1983

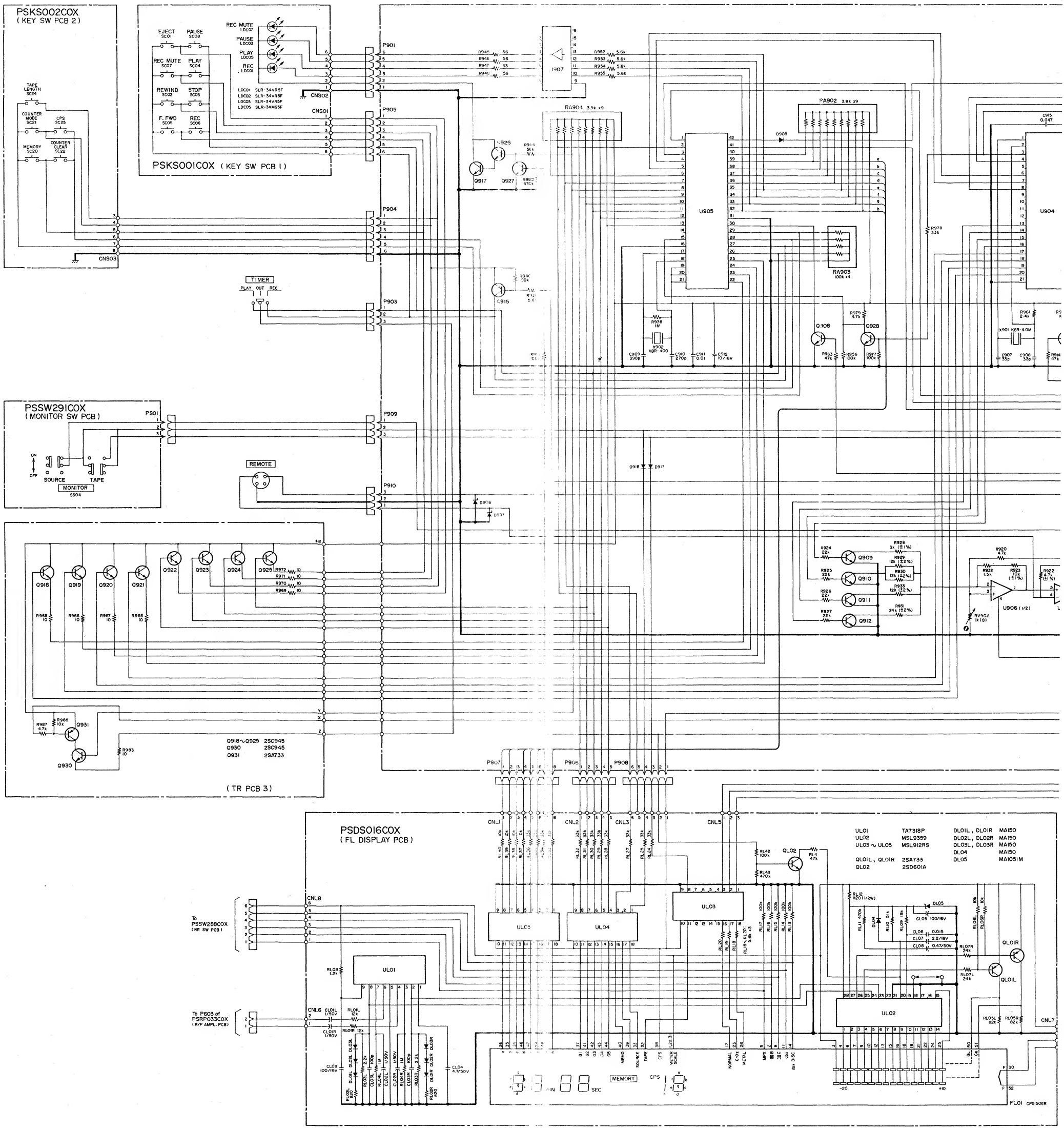
PSKS002C0X
(KEY SW PCB 2)
PSKS001C0X (KEY SW PCB 1)
PSSW291C0X
(MONITOR SW PCB)
(TR PCB 3)
PSDS016C0X
(FL DISPLAY PCB)
To PSSW288C0X (NR SW PCB)
To P603 of PSRP033C0X (R/P AMPL. PCB)
U905
U904
U906 (1/2)
UL01
UL02
UL03
UL04
UL05
FL01 CP5150GR
TIMER
REMOTE
MONITOR
MEMORY
Q918~Q925 2SC945
Q930 2SC945
Q931 2SA733
UL01 TA7318P
UL02 MSL9359
UL03 ~ UL05 MSL912RS
QL01L, QL01R 2SA733
QL02 2SD601A
DL01L, DL01R MA150
DL02L, DL02R MA150
DL03L, DL03R MA150
DL04 MA150
DL05 MA1051M

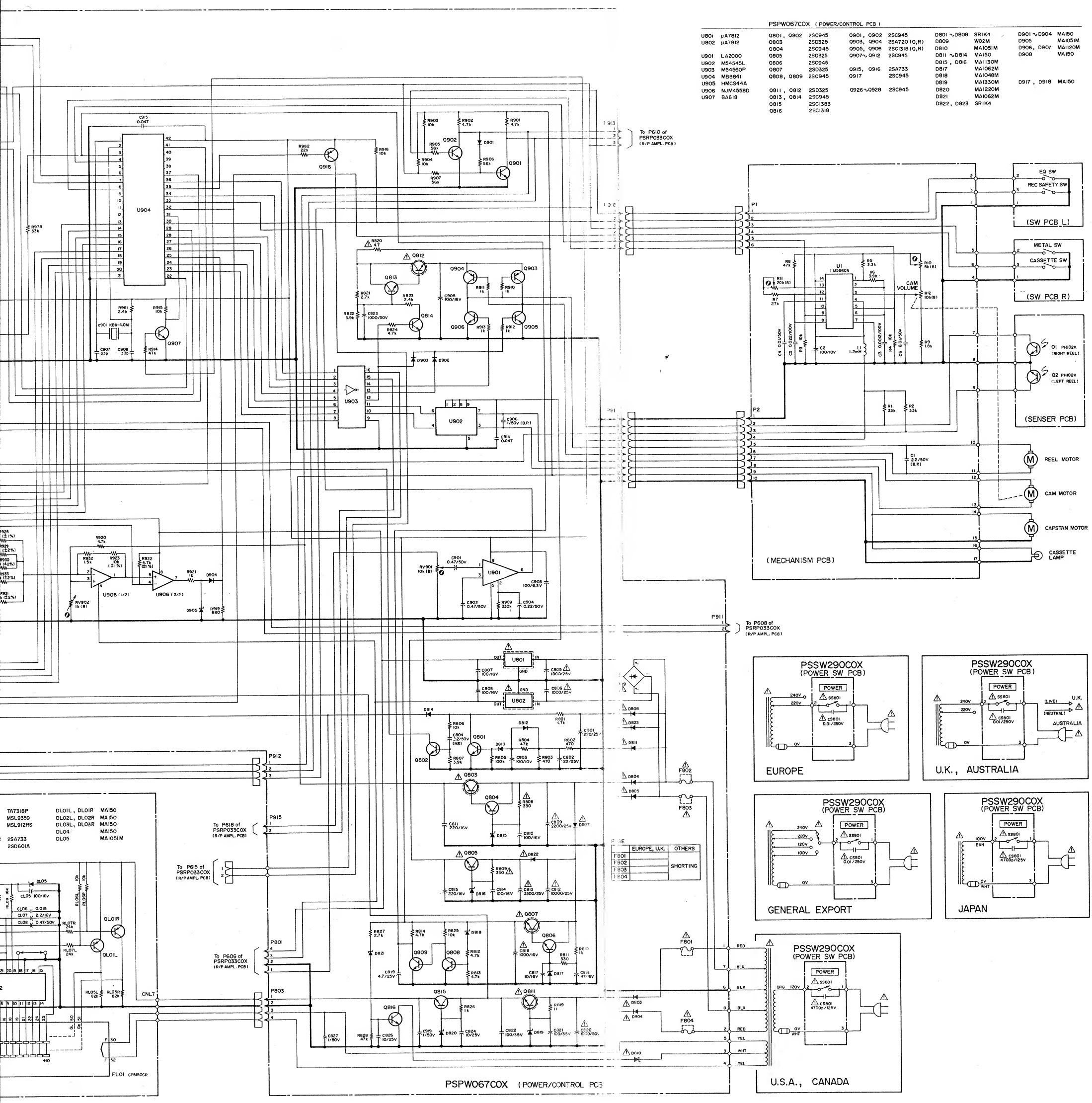

PSPW067COX (POWER/CONTROL PCB)

U801	μA7812	Q801, Q802	2SC945	Q901, Q902	2SC945	D801 ∿D808	SR1K4	D901 ∿D904	MA150
U802	μA7912	Q803	2SD325	Q903, Q904	2SA720 (Q,R)	D809	W02M	D905	MA1051M
		Q804	2SC945	Q905, Q906	2SC1318 (Q,R)	D810	MA1051M	D906, D907	MA1120M
U901	LA2000	Q805	2SD325	Q907∿ Q912	2SC945	D811 ∿D814	MA150	D908	MA150
U902	M54545L	Q806	2SC945			D815, D816	MA1130M		
U903	M54560P	Q807	2SD325	Q915, Q916	2SA733	D817	MA1062M		
U904	MB8841	Q808, Q809	2SC945	Q917	2SC945	D818	MA1048M		
U905	HMCS44A					D819	MA1330M	D917, D918	MA150
U906	NJM4558D	Q811, Q812	2SD325	Q926∿Q928	2SC945	D820	MA1220M		
U907	BA618	Q813, Q814	2SC945			D821	MA1062M		
		Q815	2SC1383			D822, D823	SR1K4		
		Q816	2SC1318						

TA7318P	DL01L, DL01R	MA150
MSL9359	DL02L, DL02R	MA150
MSL912RS	DL03L, DL03R	MA150
	DL04	MA150
2SA733	DL05	MA1051M
2SD601A		

TEAC®
V-800X
November, 1983

TEAC SCHEMATIC DIAGRAM (R/P AMPL., MIC AMPL.) V-800X

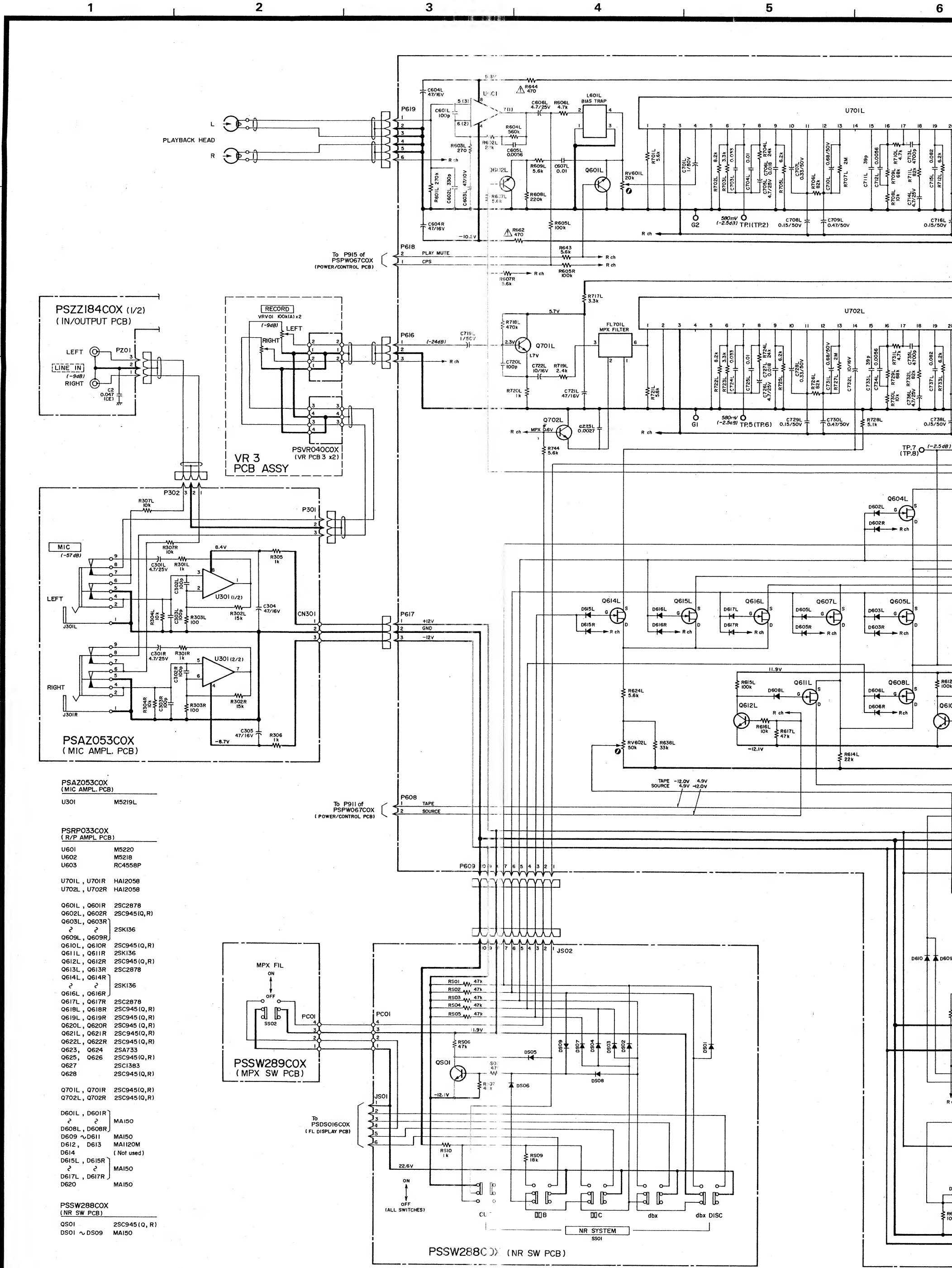

PSAZ053COX
(MIC AMPL. PCB)

U301	M5219L

PSRP033COX
(R/P AMPL PCB)

U601	M5220
U602	M5218
U603	RC4558P
U701L , U701R	HAI2058
U702L , U702R	HAI2058
Q601L , Q601R	2SC2878
Q602L , Q602R	2SC945(Q,R)
Q603L, Q603R ~ Q609L , Q609R	2SK136
Q610L , Q610R	2SC945(Q,R)
Q611L , Q611R	2SK136
Q612L , Q612R	2SC945(Q,R)
Q613L , Q613R	2SC2878
Q614L , Q614R ~ Q616L , Q616R	2SK136
Q617L , Q617R	2SC2878
Q618L , Q618R	2SC945(Q,R)
Q619L , Q619R	2SC945(Q,R)
Q620L , Q620R	2SC945(Q,R)
Q621L , Q621R	2SC945(Q,R)
Q622L , Q622R	2SC945(Q,R)
Q623, Q624	2SA733
Q625, Q626	2SC945(Q,R)
Q627	2SC1383
Q628	2SC945(Q,R)
Q701L , Q701R	2SC945(Q,R)
Q702L , Q702R	2SC945(Q,R)
D601L , D601R ~ D608L , D608R	MA150
D609 ∿ D611	MA150
D612, D613	MA1120M
D614	(Not used)
D615L , D615R ~ D617L , D617R	MA150
D620	MA150

PSSW288COX
(NR SW PCB)

QS01	2SC945(Q, R)
DS01 ∿ DS09	MA150

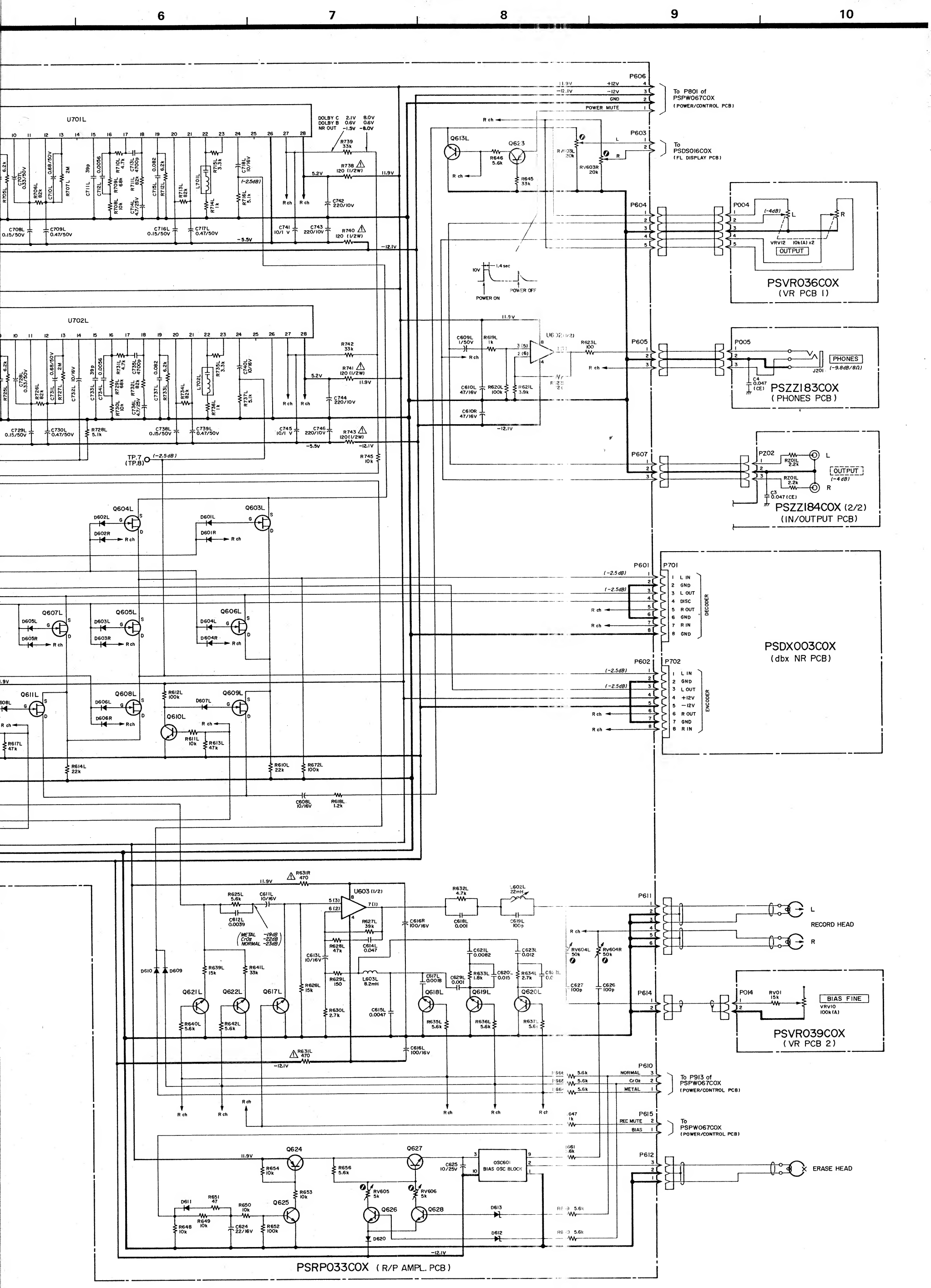

V-800X Stereo Cassette Deck

3rd Issue; April, 1984

TEAC SCHEMATIC DIAGRAM (POWER/CONTROL, FL DISPLAY) V-800X

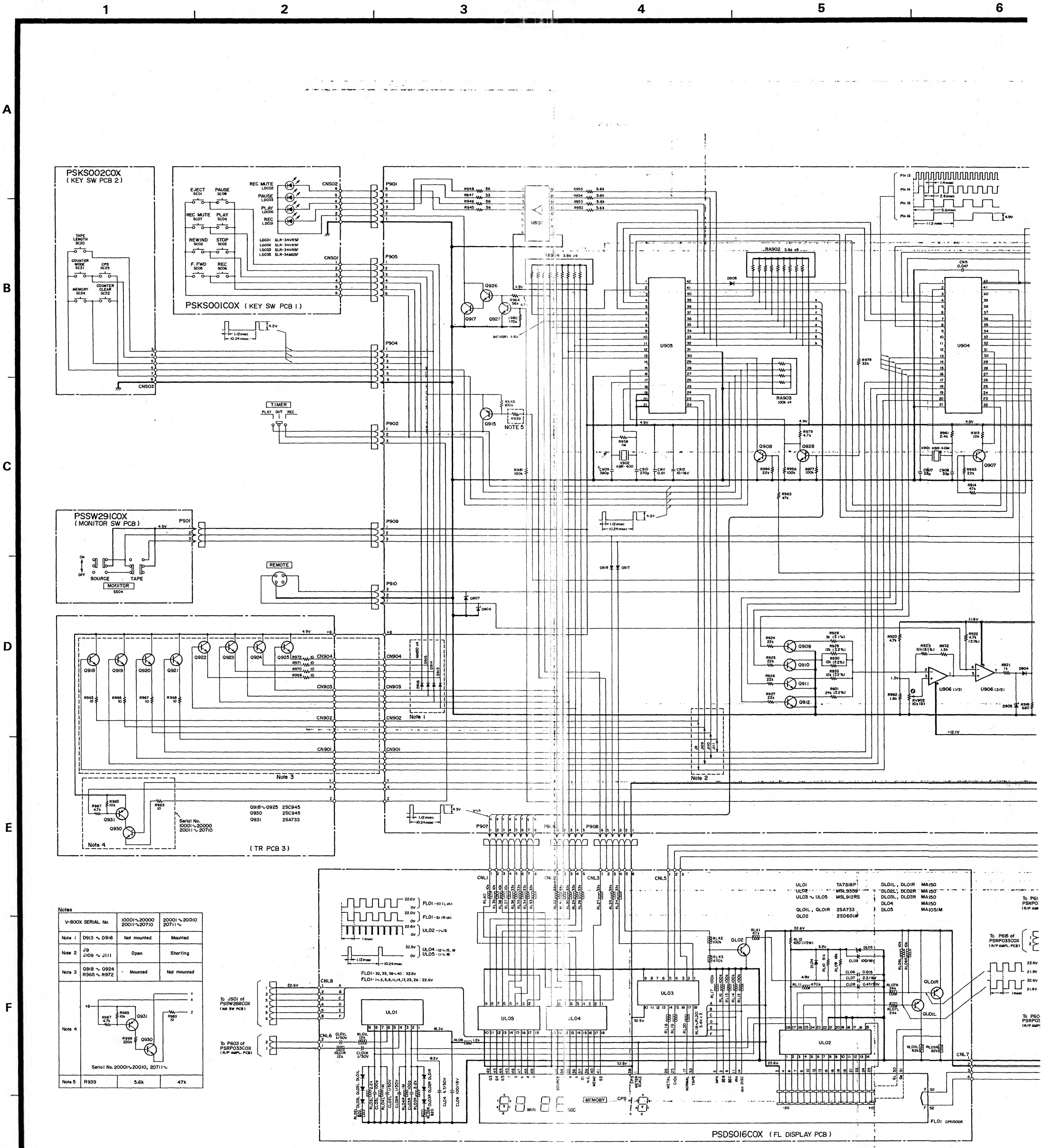

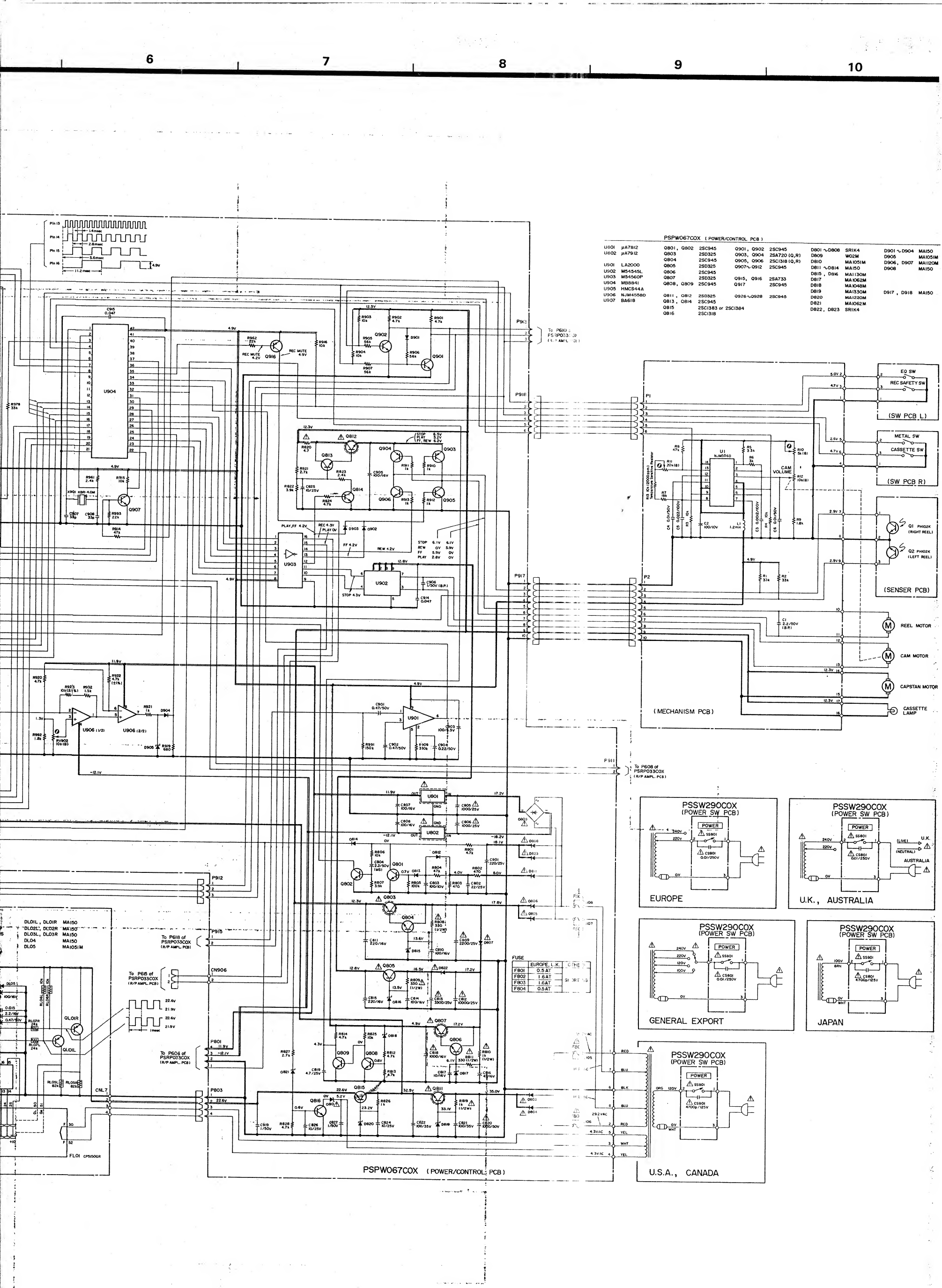

V-800X Stereo Cassette Deck

3rd Issue; April, 1984

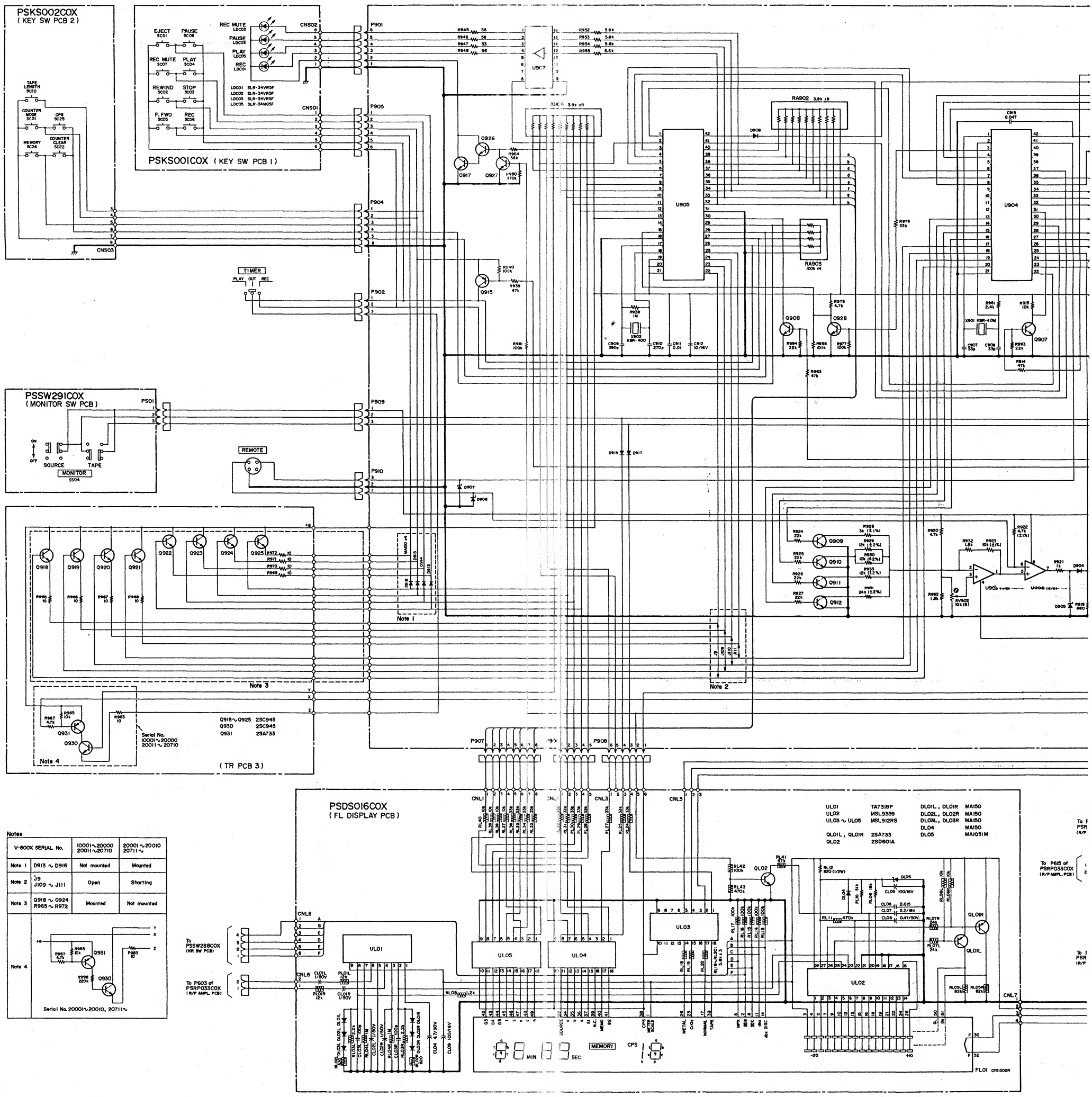

Notes

V-800X SERIAL No.		10001∼20000 20011∼20710	20001∼20010 20711∼
Note 1	D913 ∼ D916	Not mounted	Mounted
Note 2	J9 J109 ∼ J111	Open	Shorting
Note 3	Q918 ∼ Q924 R965 ∼ R972	Mounted	Not mounted
Note 4	Serial No. 20001∼20010, 20711∼		

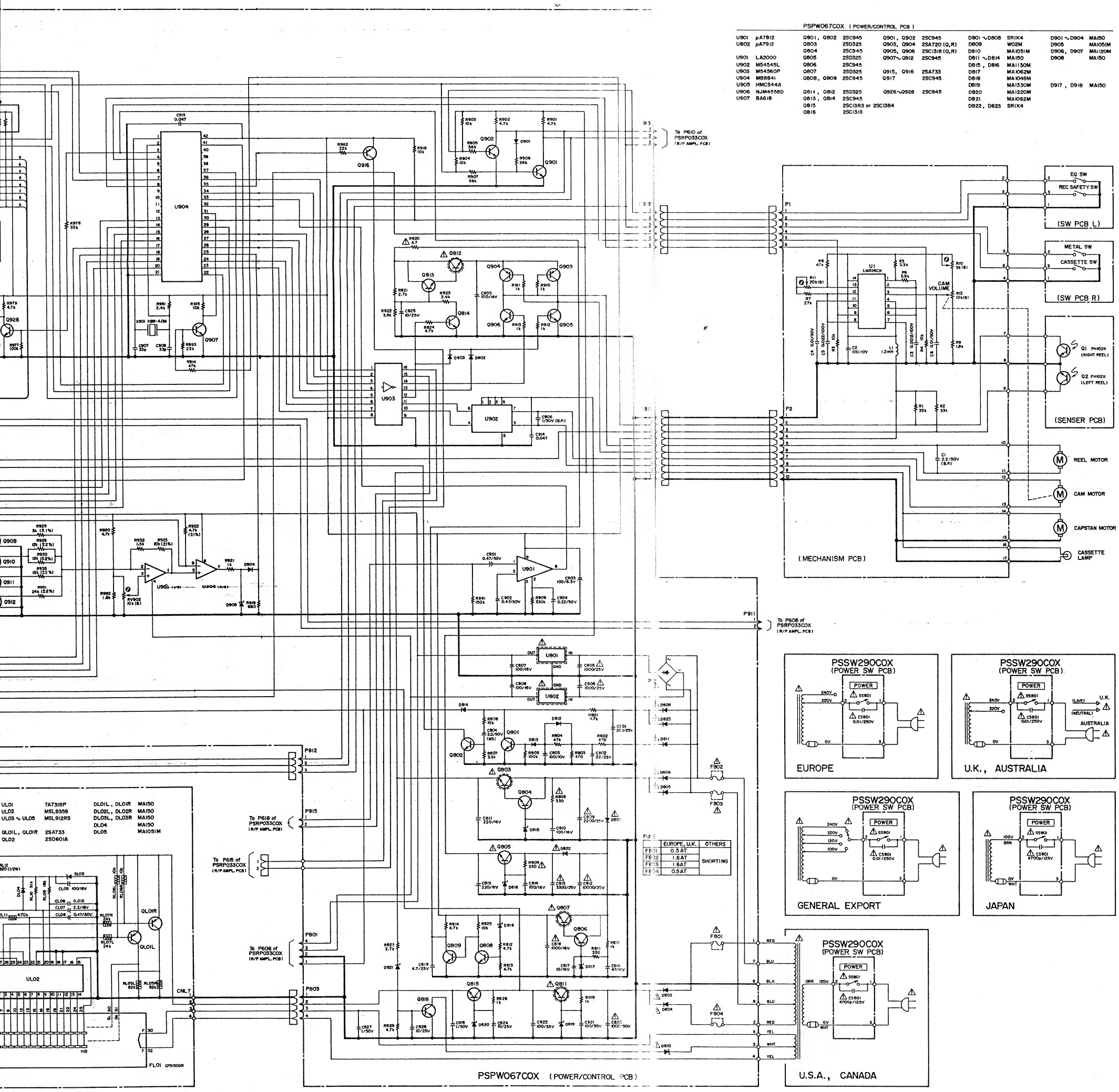

PSPW067COX (POWER/CONTROL PCB)

U801	μA7812	Q801, Q802	2SC945	Q901, Q902	2SC945	D801 ∿ D808	SR1K4	D901 ∿ D904	MA150
U802	μA7912	Q803	2SD325	Q903, Q904	2SA720 (Q,R)	D809	W02M	D905	MA1051M
		Q804	2SC945	Q905, Q906	2SC1318 (Q,R)	D810	MA1051M	D906, D907	MA1120M
U901	LA2000	Q805	2SD325	Q907∿ Q912	2SC945	D811 ∿ D814	MA150	D908	MA150
U902	M54545L	Q806	2SC945			D815, D816	MA1130M		
U903	M54560P	Q807	2SD325	Q915, Q916	2SA733	D817	MA1062M		
U904	MB8841	Q808, Q809	2SC945	Q917	2SC945	D818	MA1048M		
U905	HMCS44A					D819	MA1330M	D917, D918	MA150
U906	NJM4558D	Q811, Q812	2SD325	Q926∿Q928	2SC945	D820	MA1220M		
U907	BA618	Q813, Q814	2SC945			D821	MA1062M		
		Q815	2SC1383 or 2SC1384			D822, D823	SR1K4		
		Q816	2SC1318						

UL01	TA7318P	DL01L, DL01R	MA150
UL02	MSL9359	DL02L, DL02R	MA150
UL03 ∿ UL05	MSL912RS	DL03L, DL03R	MA150
		DL04	MA150
QL01L, QL01R	2SA733	DL05	MA1051M
QL02	2SD601A		

FUSE

	EUROPE, U.K.	OTHERS
FB01	0.5AT	SHORTING
FB02	1.6AT	
FB03	1.6AT	
FB04	0.5AT	

TEAC® V-800X

2nd Issue; February, 1984

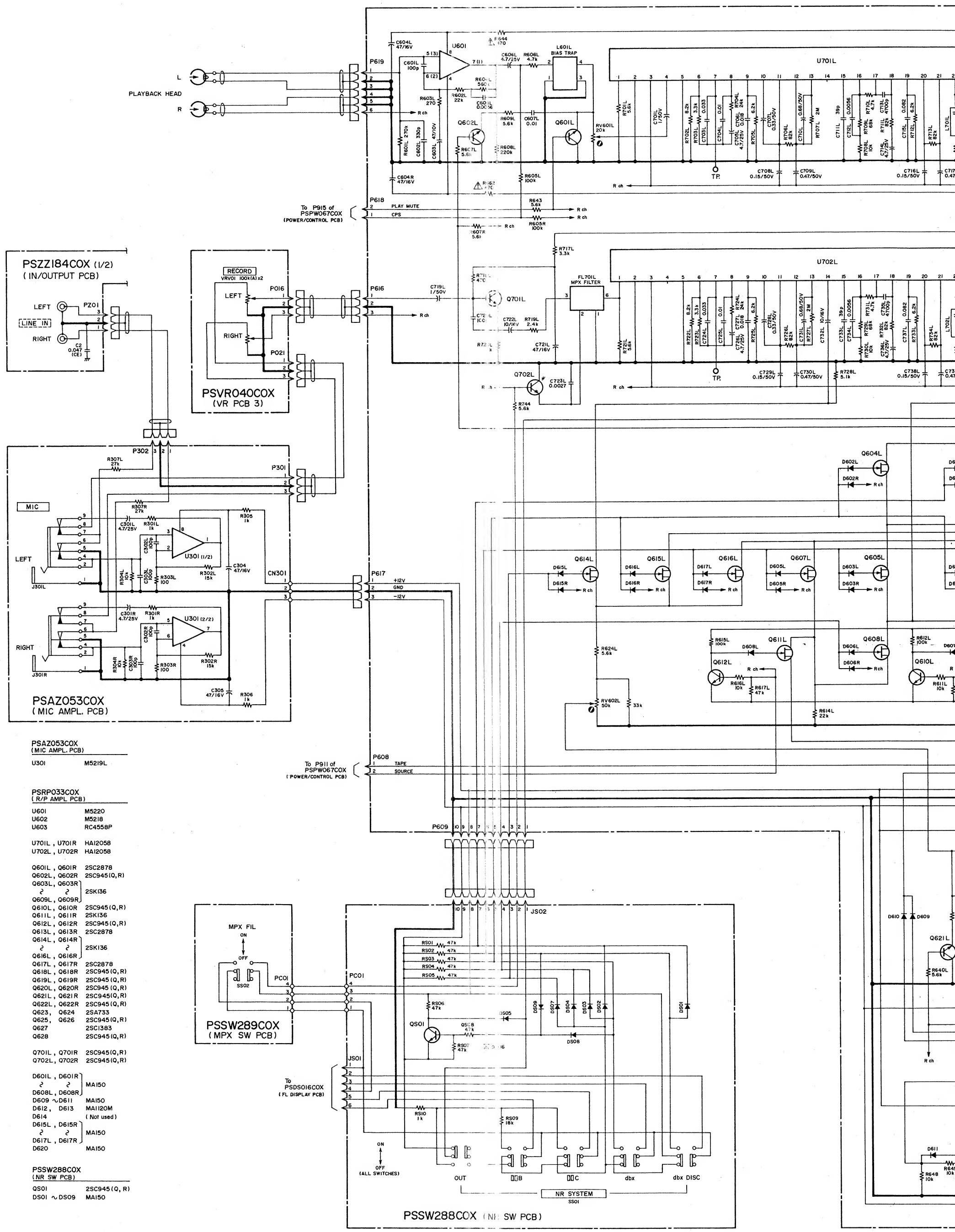

PSAZ053COX
(MIC AMPL. PCB)

U301	M5219L

PSRP033COX
(R/P AMPL PCB)

U601	M5220
U602	M5218
U603	RC4558P
U701L , U701R	HA12058
U702L , U702R	HA12058
Q601L , Q601R	2SC2878
Q602L , Q602R	2SC945(Q,R)
Q603L , Q603R ~ Q609L , Q609R	2SK136
Q610L , Q610R	2SC945(Q,R)
Q611L , Q611R	2SK136
Q612L , Q612R	2SC945(Q,R)
Q613L , Q613R	2SC2878
Q614L , Q614R ~ Q616L , Q616R	2SK136
Q617L , Q617R	2SC2878
Q618L , Q618R	2SC945(Q,R)
Q619L , Q619R	2SC945(Q,R)
Q620L , Q620R	2SC945(Q,R)
Q621L , Q621R	2SC945(Q,R)
Q622L , Q622R	2SC945(Q,R)
Q623, Q624	2SA733
Q625, Q626	2SC945(Q,R)
Q627	2SC1383
Q628	2SC945(Q,R)
Q701L , Q701R	2SC945(Q,R)
Q702L , Q702R	2SC945(Q,R)
D601L , D601R ~ D608L , D608R	MA150
D609 ~ D611	MA150
D612, D613	MA1120M
D614	(Not used)
D615L , D615R ~ D617L , D617R	MA150
D620	MA150

PSSW288COX
(NR SW PCB)

QS01	2SC945(Q, R)
DS01 ~ DS09	MA150

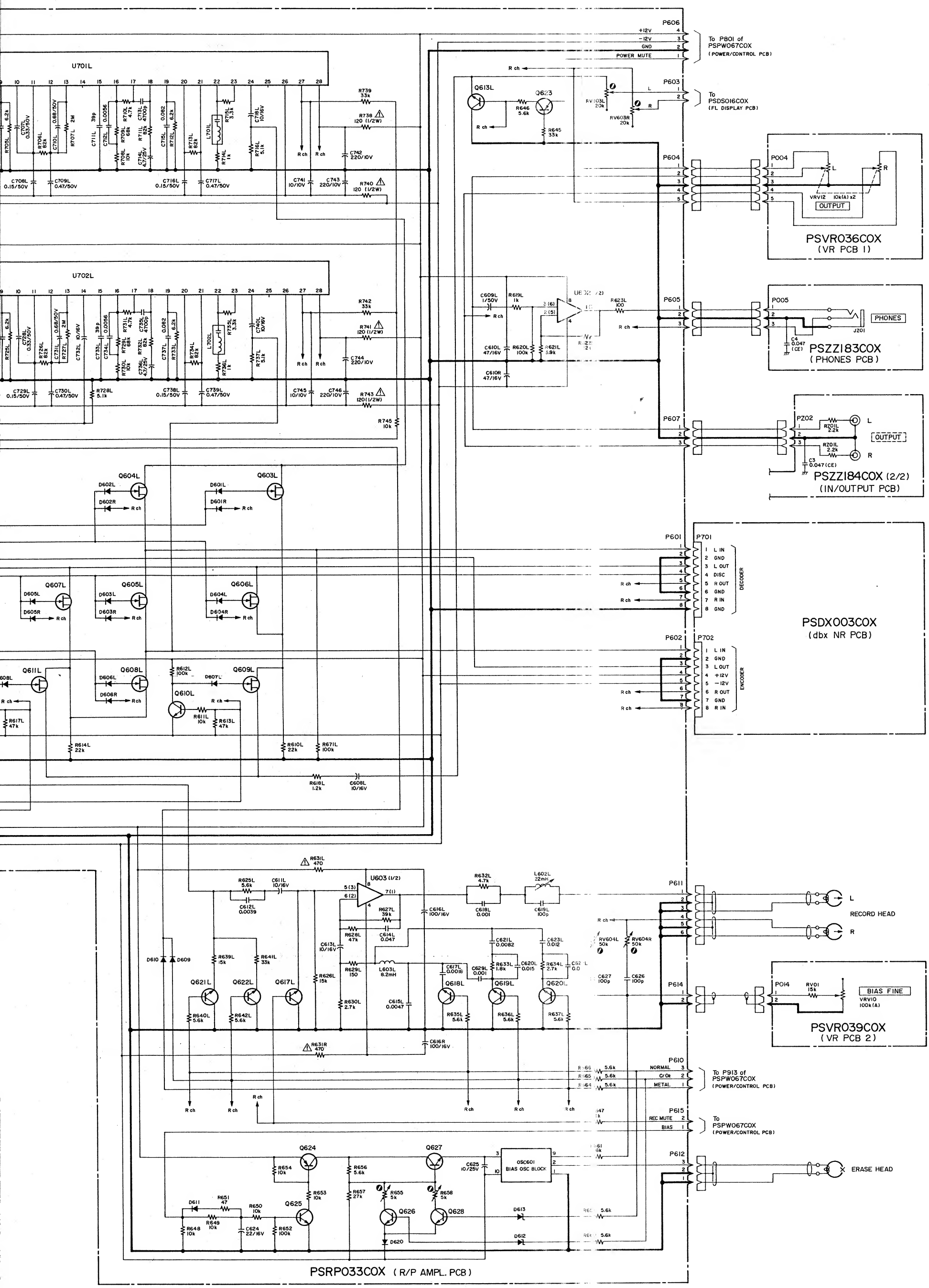

TEAC V-800X

2nd Issue; February, 1984

12-7 EQ Adjustment

EQ adjustment is performed twice, in the order of VCA(R,L), EQ(R,L), VCA(R,L), EQ(R,L), VCA(R,L). The adjustment process is the same as for the VCA level adjustment, except that a 12 kHz signal is used. The data format is shown in figure 12-17, and the timing chart is in figure 12-19.

The fixed EQ adjust data is computed from the A value gained during matching in the comparative mode as follows: If A is greater than 8, the fixed data is 8-(A-8)-1=(16-A)-1 If 8 is greater than A, the fixed data is 8+(8-A)-1=(16-A)-1

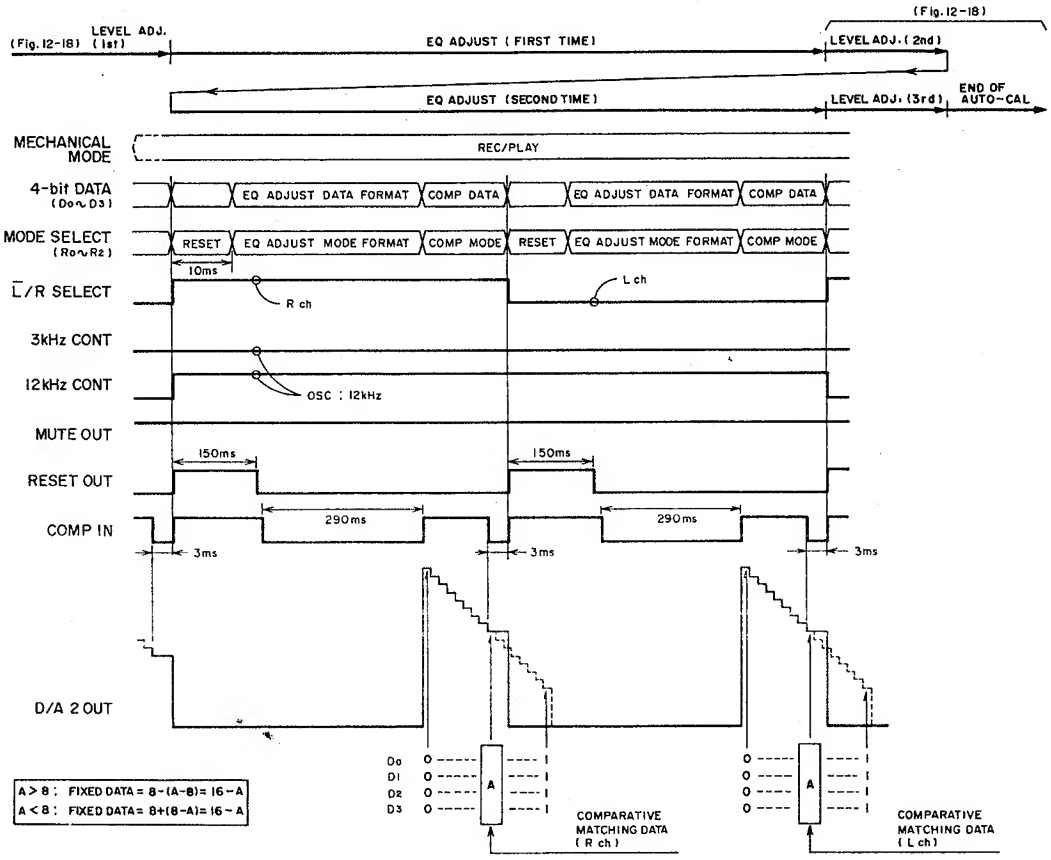

Fig. 12-19 EQ Adjustment